YAMAHA

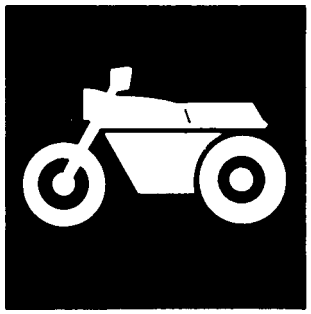

PARTS CATALOGUE

YZF–R6’99 (5EB1) EUROPE
YZF–R6’99 (5EB2) AUSTRIA,FINLAND,NORWAY
YZF–R6L (5EB4) AUSTRALIA,NEW ZEALAND

YAMAHA GENUINE Parts & Accessories

295EB–300E3

A2

A3

FOREWORD

This Parts Catalogue is related to the parts for the model(s) in the below frame. When you are ordering replacement parts, please refer to this Parts Catalogue and quote both part numbers and part names correctly.

YZF–R6'99/YZF–R6L(5EB1/5EB2/5EB4)

1. Modifications or additions which have been made after issue of the Parts Catalogue will be announced in the Yamaha Parts News.
   It is advisable that you make necessary corrections to the Parts Catalogue according to the Yamaha Parts News.
2. Abbreviations
   The Following abbreviations are used in this Parts Catalogue.
   "UR" Use specified parts number.
   "UN" Use as many as needed.
   "AP" Alternate Parts
   "LM" Local Made (Parts need to be ordered locally)
   "F#" Frame No. (Applicable machine No.)
3. Parts, which are to be supplied in an assembly, are listed with a dot(.) in front of the part name as shown below.

   EXAMPLE
   CARBURETOR ASSY
   .JET, PILOT
   .NOZZLE, MAIN
4. Number of component for assembly
   The numeral appearing to the right of each component part indicates the quantity of parts for each assembly unit.

   EXAMPLE

PART NO.	DESCRIPTION	Q'TY	REMARKS
2F5–83310–60	FRONT FLASHER LIGHT ASSY	2	
115–83311–60	.BULB (6V–18W)	1	
1M1–83309–60	.REFLECTOR	1	

5. Applicable colors of graphics are represented in the "REMARKS" as shown below.

PART NO.	DESCRIPTION	Q'TY	REMARKS
2N4–24110–00–X5	.FUEL TANK COMP.	2	MXR
3J1–24240–10	.GRAPHIC, FUEL TANK	1	for MXR

6. Applicable Serial No.

   Engine Serial No. Frame Serial No.

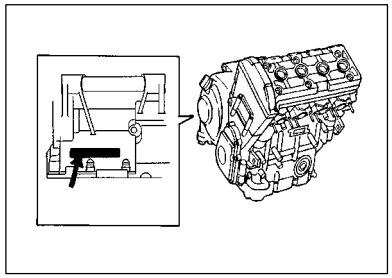

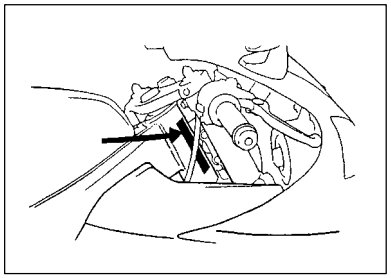

7. Note that the illustrations for reference in funding parts numbers, not to be used for assembling. When assembling, pleas use the applicable service manual.
8. The asterisk (*) before a reference number indicates modification items after the first edition.

MODEL LABEL

(1) A label called “Model Label” is affixed in the location as indicated in (3) below. When using this parts catalogue, please be sure to cross–refer the “model code – production code No.” in the catalogue to the “model code – production code No. “indicated on the Model Label affixed onto the product concemed.

	a b
○	xxxx – xxx
●	x c

a: Model Type Code
b: Production Code No.
c: Colouring Type

○	4TW1–010
●	A

(2) “Model Label”Indication

(3) Model Label Affixing Location

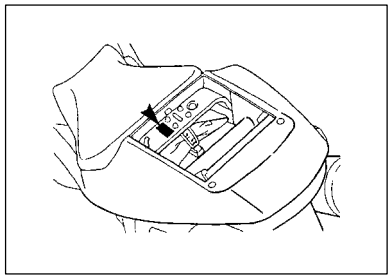

(4) Model Code – Production Code Number of Model Listed in This Parts Catalog

Model Code	Production Code No.	Country (destination)	Model Code	Production Code No.	Country (destination)
5EB1	010	ITALY			
	020	BELGIUM			
	030	DENMARK			
	050	ENGLAND			
	060	GREECE			
	070	HOLLAND			
	080	NORWAY			
	090	PORTUGAL			
	100	SWEDEN			
5EB2	020	AUSTRIA			
	030	FINLAND			
	040	NORWAY			
5EB4	010	AUSTRALIA			
	010	NEW ZEALAND			

(5) Colouning Information

Model Code	Colouring type code	Colour code	Colour Name	Abbrevi-ation
5EB1/5EB2/	A	0390	BLUISH WHITE COCKTAIL 1	BWC1
5EB4	B	0564	DEEP PURPLISH BLUE METALLIC C	DPBMC
5EB1/5EB2	C	0660	SILVER METALLIC 1	SM1

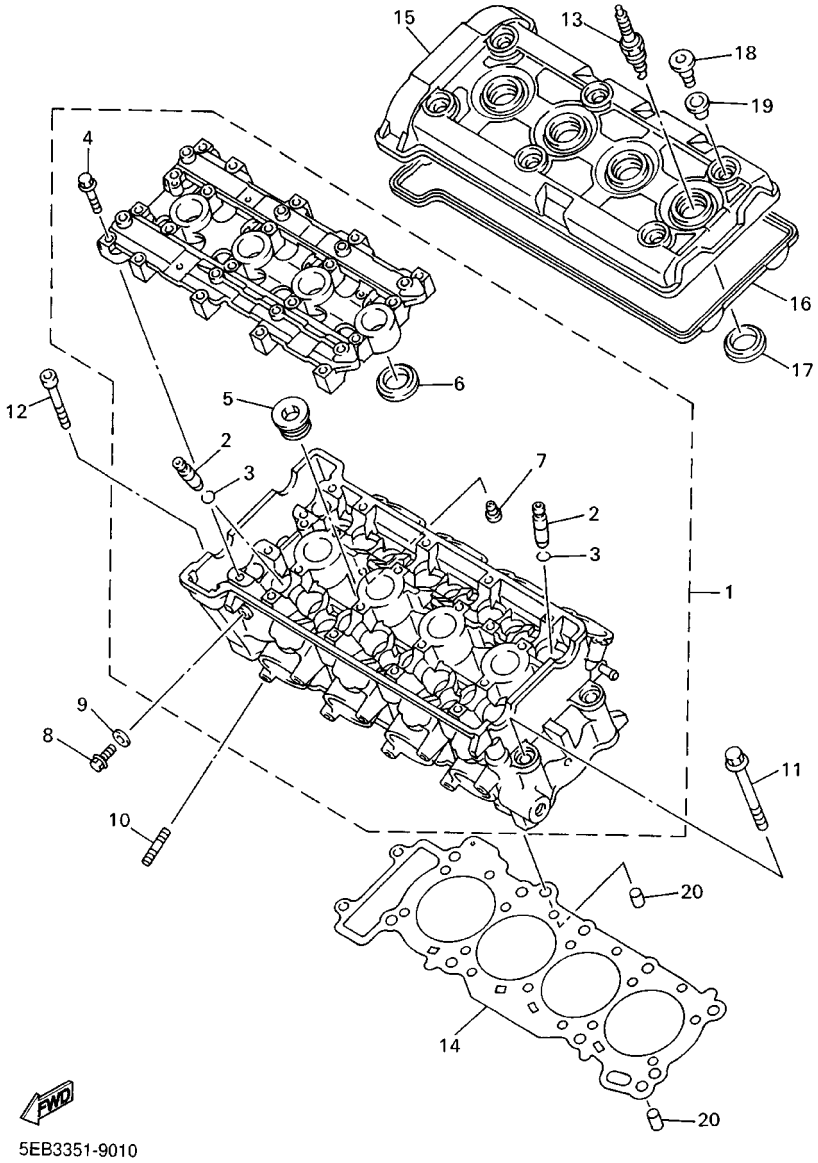

FIG. 1 CYLINDER

REF. NO.	PART NO.	DESCRIPTION	5EB1	5EB2	5EB4			REMARKS
1	5EB–11101–00	CYLINDER HEAD ASSY	1	1	1			
2	5EB–11133–10	.GUIDE, INTAKE VALVE	16	16	16			
3	93440–10153	.CIRCLIP	16	16	16			
4	90105–067A6	.BOLT, WASHER BASED	20	20	20			
5	90340–27129	.PLUG, STRAIGHT SCREW	3	3	3			
6	5EB–11195–00	.GASKET	4	4	4			
7	11H–15138–00	.NOZZLE 1	1	1	1			
8	95027–08012	BOLT, FLANGE	1	1	1			
9	90430–08119	GASKET	1	1	1			
10	95617–08625	BOLT, STUD	8	8	8			
11	90105–107A1	BOLT, WASHER BASED	10	10	10			
12	91317–06045	BOLT	2	2	2			
*13	94701–00386	PLUG, SPARK (NGK CR10EK)	4	4	4			
14	5EB–11181–00	GASKET, CYLINDER HEAD 1	1	1	1			
15	5EB–11191–00	COVER, CYLINDER HEAD 1	1	1	1			
16	5EB–11193–00	GASKET, HEAD COVER 1	1	1	1			
17	5EB–11195–00	GASKET	4	4	4			
18	90109–066F0	BOLT	6	6	6			
19	4KG–1111G–00	RUBBER, MOUNT 1	6	6	6			
20	99530–10114	PIN, DOWEL	2	2	2			

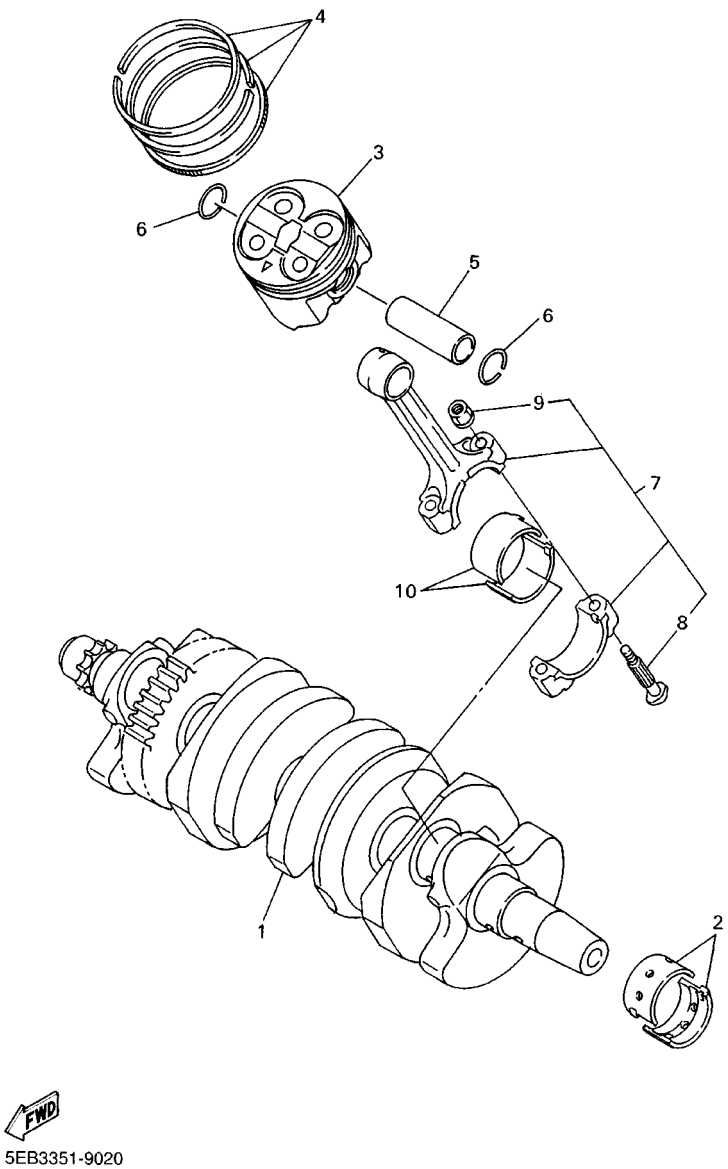

FIG. 2 CRANKSHAFT. PISTON

REF. NO.	PART NO.	DESCRIPTION	5EB1	5EB2	5EB4			REMARKS
1	5EB–11411–00	CRANKSHAFT	1	1	1			
2	5EB–11416–00	PLANE BEARING, CRANKSHAFT 1	10	10	10			UR BLUE
	5EB–11416–10	PLANE BEARING, CRANKSHAFT 1	10	10	10			UR BLACK
	5EB–11416–20	PLANE BEARING, CRANKSHAFT 1	10	10	10			UR BROWN
	5EB–11416–30	PLANE BEARING, CRANKSHAFT 1	10	10	10			UR GREEN
	5EB–11416–A0	PLANE BEARING, CRANKSHAFT 1	10	10	10			UR WHITE
3	5EB–11631–00	PISTON (STD)	4	4	4			
4	5EB–11603–00	PISTON RING SET (STD)	4	4	4			
5	5EB–11633–00	PIN, PISTON	4	4	4			
6	93450–17129	CIRCLIP	8	8	8			
7	5EB–11650–00	CONNECTING ROD ASSY	4	4	4			
8	5EB–11654–00	.BOLT, CONNECTING ROD	2	2	2			
9	90179–07652	.NUT	2	2	2			
10	4TV–11656–00	PLANE BEARING, CONNECTING ROD	8	8	8			UR BLUE
	4TV–11656–10	PLANE BEARING, CONNECTING ROD	8	8	8			UR BLACK
	4TV–11656–20	PLANE BEARING, CONNECTING ROD	8	8	8			UR BROWN
	4TV–11656–30	PLANE BEARING, CONNECTING ROD	8	8	8			UR GREEN

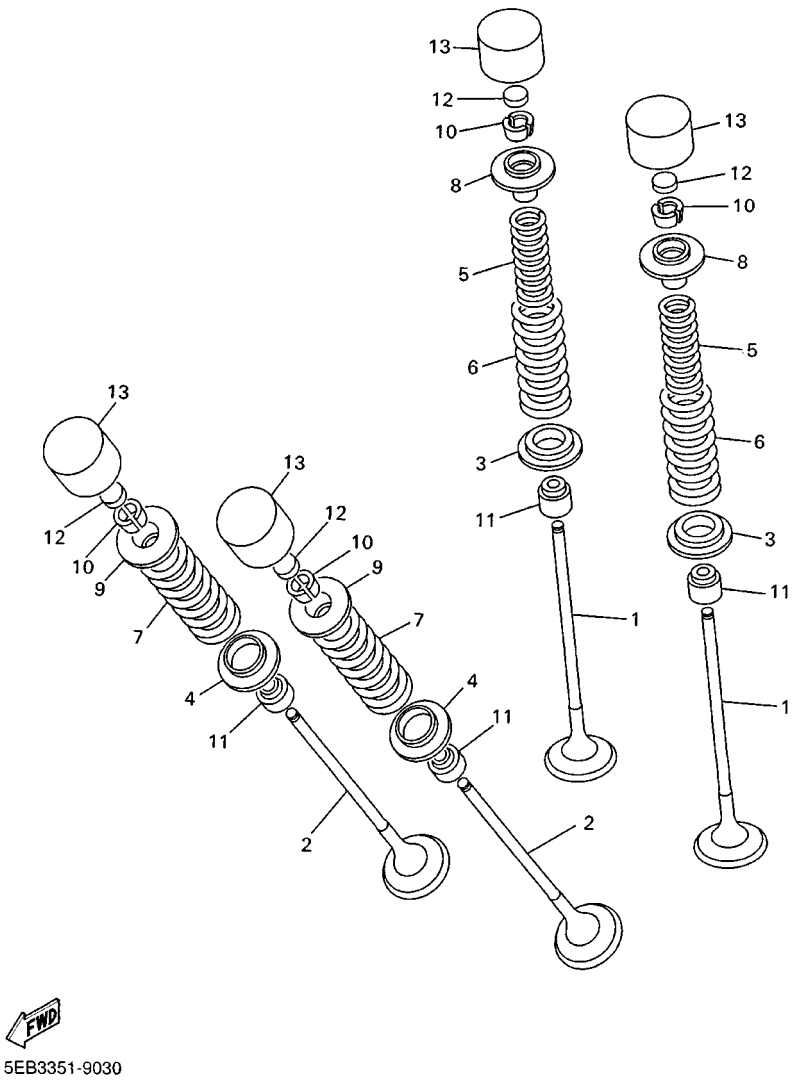

FIG. 3 VALVE

REF. NO.	PART NO.	DESCRIPTION	5EB1	5EB2	5EB4			REMARKS
1	5EB–12111–00	VALVE, INTAKE	8	8	8			
2	5EB–12121–00	VALVE, EXHAUST	8	8	8			
3	5EB–12116–00	SEAT, VALVE SPRING	8	8	8			
4	5EB–12126–00	SEAT, VALVE SPRING 2	8	8	8			
5	5EB–12113–00	SPRING, VALVE INNER	8	8	8			
6	5EB–12114–00	SPRING, VALVE OUTER	8	8	8			
7	5EB–12124–01	SPRING, VALVE OUTER	8	8	8			
8	5EB–12117–00	RETAINER, VALVE SPRING	8	8	8			
9	5EB–12127–00	RETAINER, VALVE SPRING	8	8	8			
10	1HX–12118–00	COTTER, VALVE	32	32	32			
11	4TV–12119–00	SEAL, VALVE STEM	16	16	16			
12	1HX–12168–00	PAD, ADJUSTING 2 (1.20)	16	16	16			UR
	1HX–12168–20	PAD, ADJUSTING 2 (1.25)	16	16	16			UR
	1HX–12168–40	PAD, ADJUSTING 2 (1.30)	16	16	16			UR
	1HX–12168–60	PAD, ADJUSTING 2 (1.35)	16	16	16			UR
	1HX–12168–80	PAD, ADJUSTING 2 (1.40)	16	16	16			UR
	1HX–12168–A0	PAD, ADJUSTING 2 (1.45)	16	16	16			UR
	1HX–12168–F0	PAD, ADJUSTING 2 (1.50)	16	16	16			UR
	1HX–12168–H1	PAD, ADJUSTING 2 (1.55)	16	16	16			UR
	1HX–12168–K1	PAD, ADUSTING 2 (1.60)	16	16	16			UR
	1HX–12168–M1	PAD, ADJUSTING 2 (1.65)	16	16	16			UR
	1HX–12168–R1	PAD, ADJUSTING 2 (1.70)	16	16	16			UR
	1HX–12168–U1	PAD, ADJUSTING 2 (1.75)	16	16	16			UR
	1HX–12168–W1	PAD, ADJUSTING 2 (1.80)	16	16	16			UR
	1HX–12168–Y1	PAD, ADJUSTING 2 (1.85)	16	16	16			UR
	1HX–12169–11	PAD, ADJUSTING 2 (1.90)	16	16	16			UR
	1HX–12169–31	PAD, ADJUSTING 2 (1.95)	16	16	16			UR

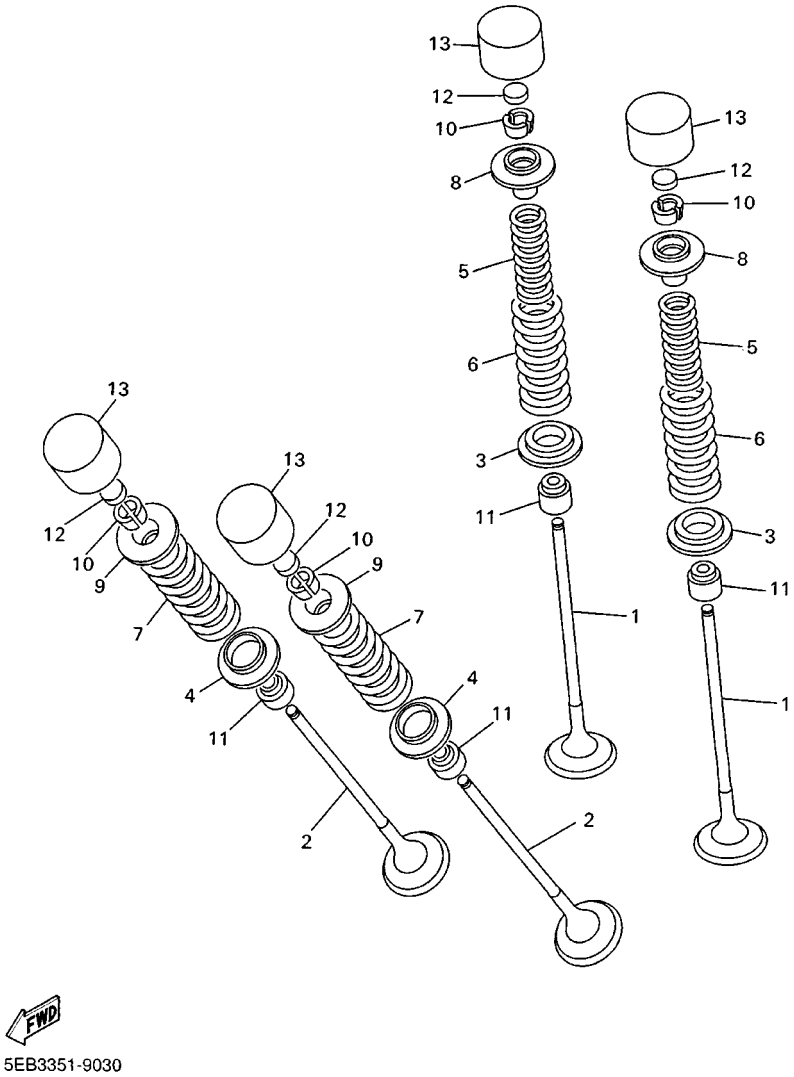

FIG. 3 VALVE

REF. NO.	PART NO.	DESCRIPTION	5EB1	5EB2	5EB4			REMARKS
12	1HX–12169–50	PAD, ADJUSTING 2 (2.00)	16	16	16			UR
	1HX–12169–70	PAD, ADJUSTING 2 (2.05)	16	16	16			UR
	1HX–12169–90	PAD, ADJUSTING 2 (2.10)	16	16	16			UR
	1HX–12169–E0	PAD, ADJUSTING 2 (2.15)	16	16	16			UR
	1HX–12169–G0	PAD, ADJUSTING 2 (2.20)	16	16	16			UR
	1HX–12169–J0	PAD, ADJUSTING 2 (2.25)	16	16	16			UR
	1HX–12169–L0	PAD, ADJUSTING 2 (2.30)	16	16	16			UR
	1HX–12169–N0	PAD, ADJUSTING 2 (2.35)	16	16	16			UR
	1HX–12169–T0	PAD, ADJUSTING 2 (2.40)	16	16	16			UR
13	5EB–12153–20	LIFTER, VALVE	16	16	16			UR BLUE
	5EB–12153–09	LIFTER, VALVE	16	16	16			AP GREEN

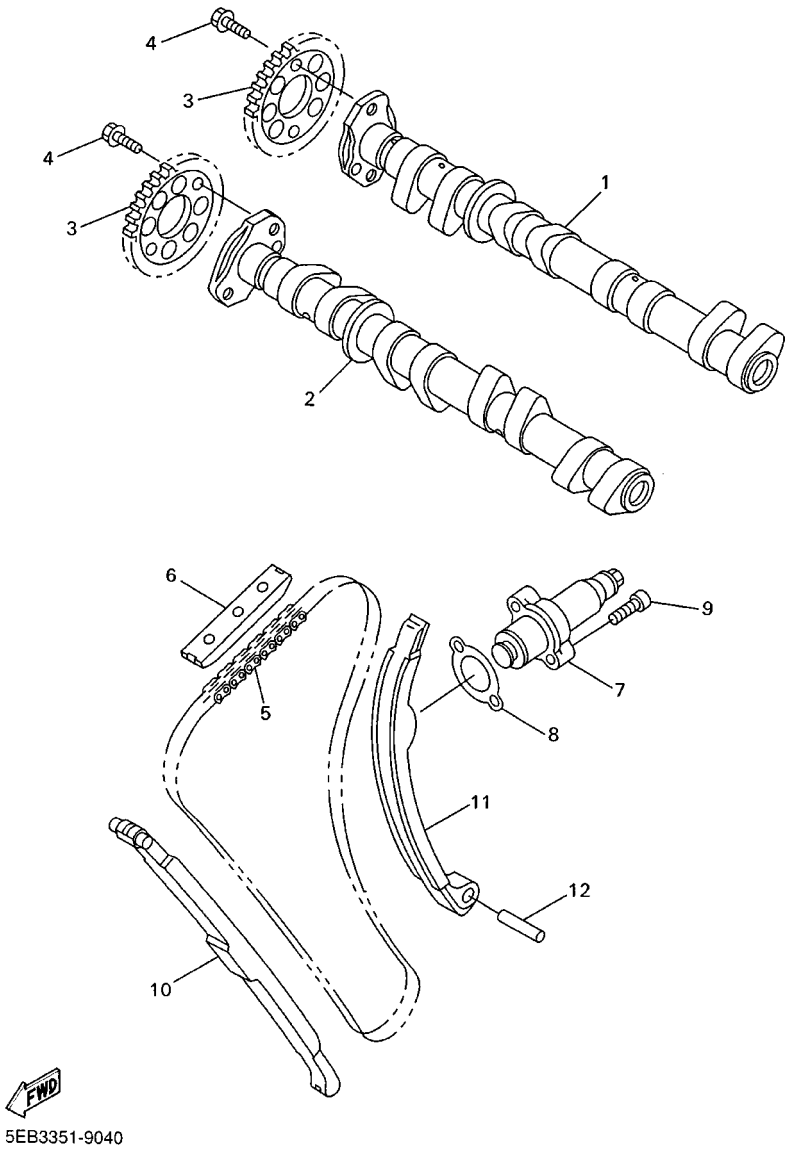

FIG. 4 CAMSHAFT. CHAIN

REF. NO.	PART NO.	DESCRIPTION	5EB1	5EB2	5EB4			REMARKS
1	5EB–12171–00	CAMSHAFT 1	1	1	1			
2	5EB–12181–00	CAMSHAFT 2	1	1	1			
3	5EB–12176–00	SPROCKET, CAM CHAIN	2	2	2			
4	90105–07342	BOLT, WASHER BASED	4	4	4			
5	94591–49120	CHAIN	1	1	1			
6	5BE–12241–00	GUIDE, STOPPER 2	1	1	1			
7	4XV–12210–00	TENSIONER ASSY, CAM CHAIN	1	1	1			
8	4FM–12213–00	GASKET, TENSIONER CASE	1	1	1			
9	91317–06025	BOLT	2	2	2			
10	5EB–12251–00	DAMPER, CHAIN 1	1	1	1			
11	5EB–12252–00	DAMPER, CHAIN 2	1	1	1			
12	93607–44190	PIN, DOWEL	1	1	1			

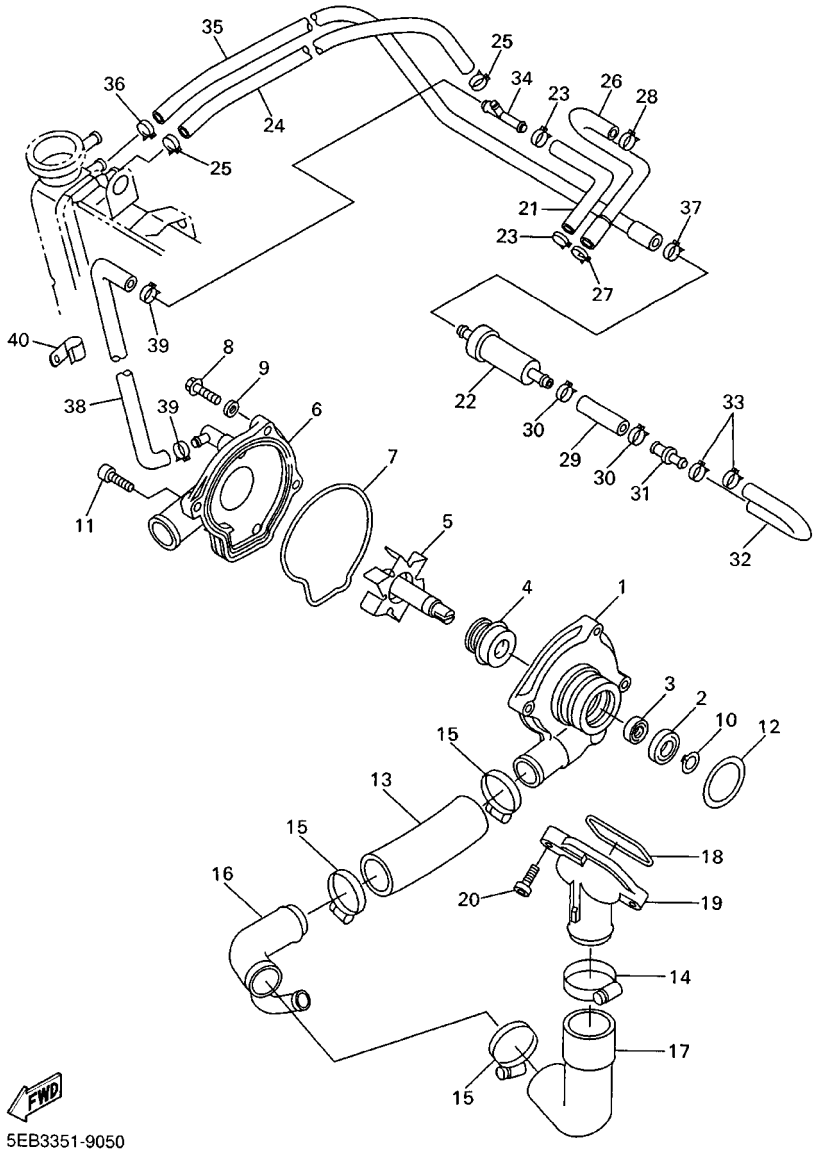

FIG. 5 WATER PUMP

REF. NO.	PART NO.	DESCRIPTION	5EB1	5EB2	5EB4			REMARKS
1	5EB–12421–00	HOUSING, WATER PUMP	1	1	1			
2	93306–00106	BEARING	1	1	1			
3	93101–12173	OIL SEAL	1	1	1			
4	11H–12438–00	SEAL, MECHANICAL	1	1	1			
5	5EB–12450–00	IMPELLER SHAFT ASSY	1	1	1			
6	5EB–12422–00	COVER, HOUSING	1	1	1			
7	5EB–12439–00	O–RING	1	1	1			
8	95024–06020	BOLT, FLANGE	2	2	2			
9	90430–06014	GASKET	1	1	1			
10	99009–12400	CIRCLIP	1	1	1			
11	90110–06149	BOLT, HEXAGON SOCKET HEAD	2	2	2			
12	93210–33133	O–RING	1	1	1			
13	4NK–12579–00	HOSE 4	1	1	1			
14	90450–38040	HOSE CLAMP ASSY	1	1	1			
15	90450–35001	HOSE CLAMP ASSY	3	3	3			
16	5EB–12581–00	JOINT, HOSE 1	1	1	1			
17	5EB–12577–00	HOSE 2	1	1	1			
18	93210–47675	O–RING	1	1	1			
19	5EB–12469–00	JOINT 1	1	1	1			
20	91317–06020	BOLT	2	2	2			
21	5EB–1243A–00	HOSE 1	1	1	1			
22	4SV–1240G–00	THERMOSTAT ASSY	1	1	1			
23	90467–11090	CLIP	2	2	2			
24	5EB–1243E–00	HOSE 2	1	1	1			
25	90467–11090	CLIP	2	2	2			
26	5EB–1243F–00	HOSE,3	1	1	1			
27	90467–11090	CLIP	1	1	1			

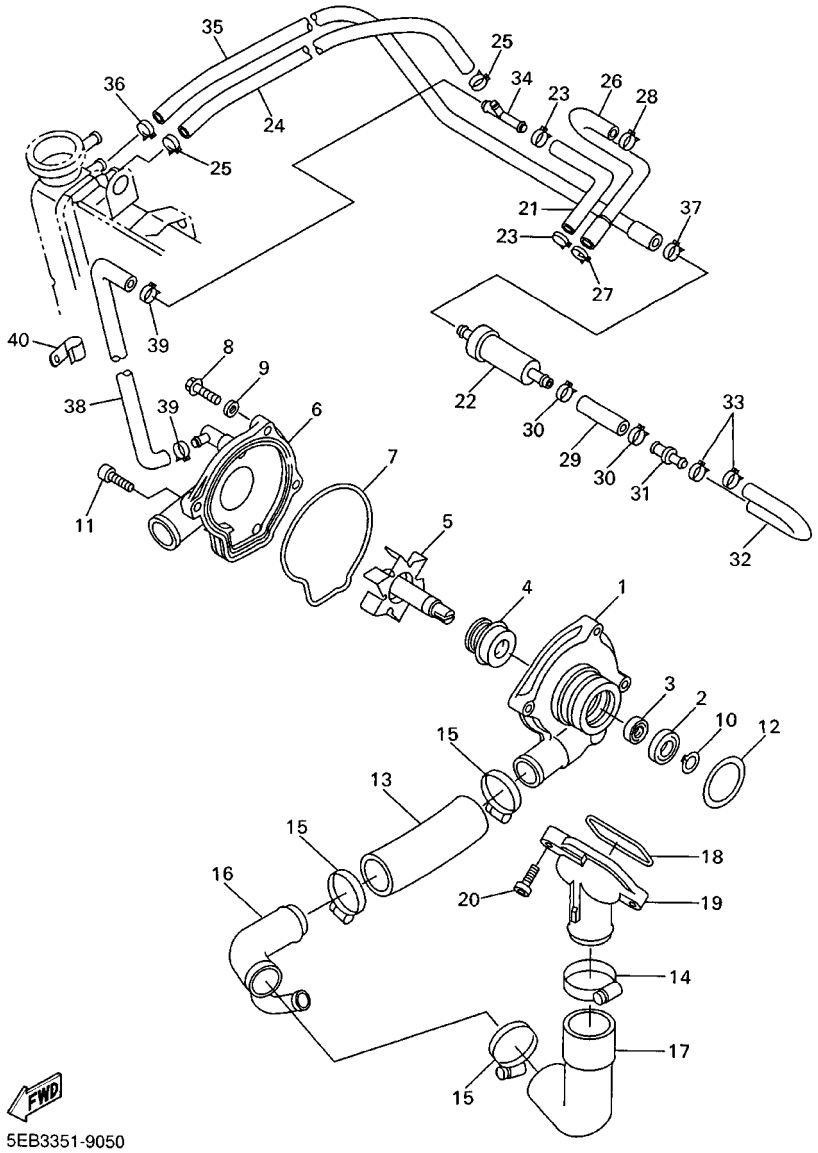

FIG. 5 WATER PUMP

REF. NO.	PART NO.	DESCRIPTION	5EB1	5EB2	5EB4			REMARKS
28	90467–09037	CLIP	1	1	1			
29	90445–123G5	HOSE	1	1	1			
30	90467–11044	CLIP	2	2	2			
31	4TV–12581–00	JOINT, HOSE 1	1	1	1			
32	5EB–12551–00	HOSE 7	1	1	1			
33	90467–09037	CLIP	2	2	2			
34	90413–07007	WAY 3	1	1	1			
35	5EB–12552–00	HOSE 8	1	1	1			
36	90467–11090	CLIP	1	1	1			
37	90467–11044	CLIP	1	1	1			
38	5EB–1244G–00	HOSE, 4	1	1	1			
39	90467–11090	CLIP	2	2	2			
40	90465–08395	CLAMP	1	1	1			

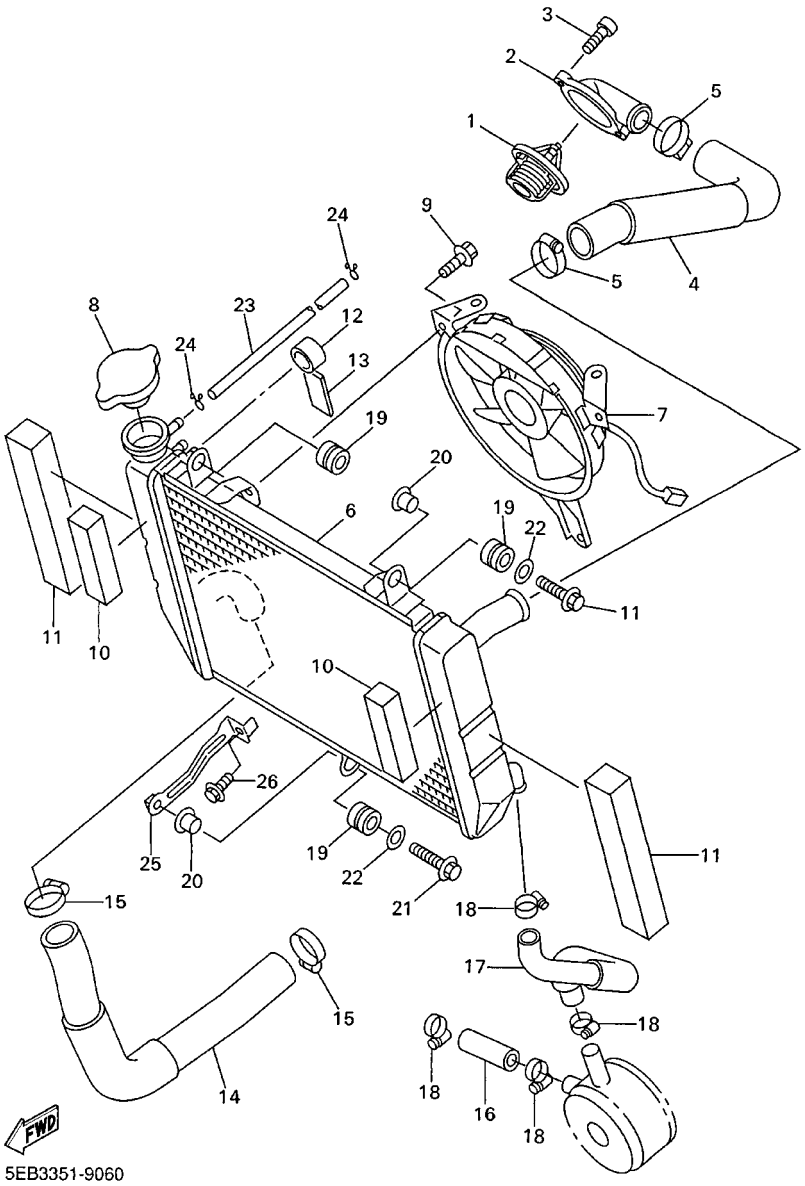

FIG. 6 RADIATOR. HOSE

REF. NO.	PART NO.	DESCRIPTION	5EB1	5EB2	5EB4			REMARKS
1	5EB–12410–00	THERMOSTAT ASSY	1	1	1			
2	5EB–12413–00	COVER, THERMOSTAT	1	1	1			
3	91317–06020	BOLT	2	2	2			
4	5EB–12578–00	HOSE 3	1	1	1			
5	90450–35001	HOSE CLAMP ASSY	2	2	2			
6	5EB–12461–00	RADIATOR ASSY	1	1	1			
7	5EB–12405–00	BLOWER ASSY	1	1	1			
8	4JH–12462–00	CAP, RADIATOR	1	1	1			
9	95811–06010	BOLT, FLANGE	3	3	3			
10	5EB–12659–00	DAMPER, AIR SHROUD 2	2	2	2			
11	5EB–12668–00	DAMPER, AIR SHROUD 3	2	2	2			
12	5EB–12498–00	PROTECTOR	1	1	1			
13	3XV–1246A–10	COVER 1	1	1	1			
14	5EB–12579–00	HOSE 4	1	1	1			
15	90450–35001	HOSE CLAMP ASSY	2	2	2			
16	5EB–12588–00	HOSE 5	1	1	1			
17	5EB–12589–00	HOSE 6	1	1	1			
18	90450–22052	HOSE CLAMP ASSY	4	4	4			
19	90480–15363	GROMMET	3	3	3			
20	90387–07391	COLLAR	2	2	2			
21	95807–06025	BOLT, FLANGE	2	2	2			
22	90201–06071	WASHER, PLATE	2	2	2			
23	90445–087K6	HOSE	1	1	1			
24	90467–08075	CLIP	2	2	2			
25	5EB–1244E–00	BRACKET 1	1	1	1			
26	95827–06012	BOLT, FLANGE	1	1	1			

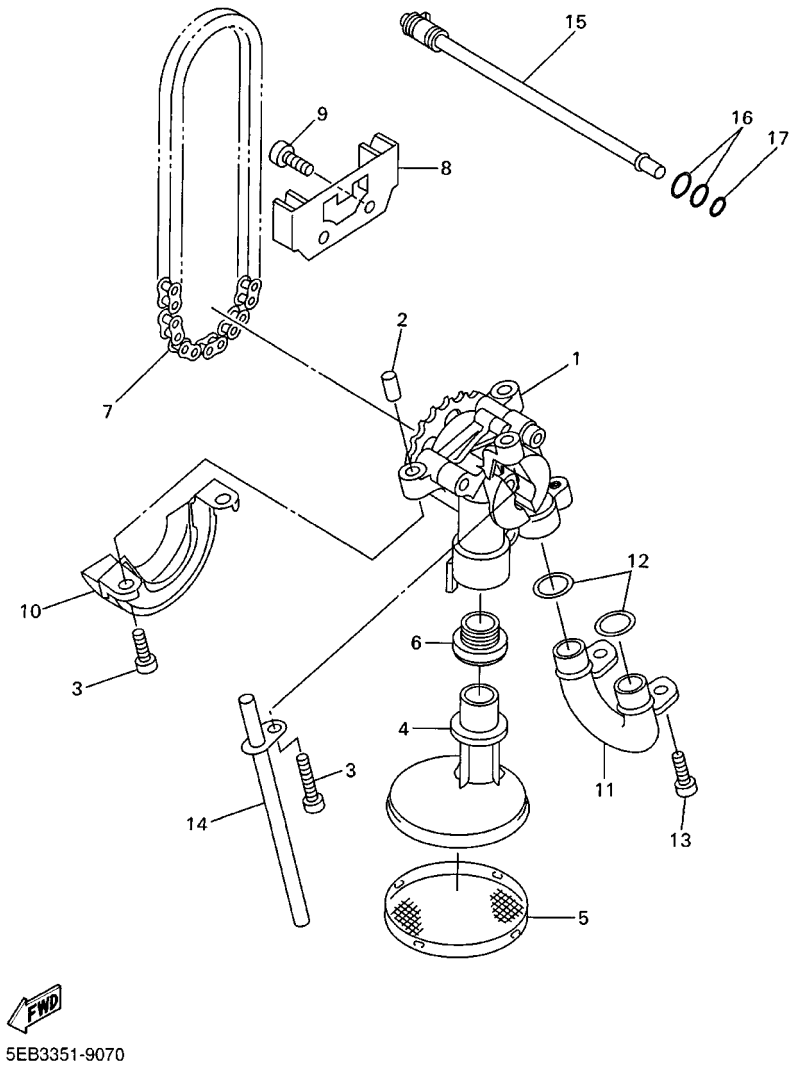

FIG. 7 OIL PUMP

REF. NO.	PART NO.	DESCRIPTION	5EB1	5EB2	5EB4			REMARKS
1	5EB–13300–00	OIL PUMP ASSY	1	1	1			
2	99530–08012	PIN, DOWEL	2	2	2			
3	91317–06030	BOLT	3	3	3			
4	5EB–13412–00	HOUSING, STRAINER	1	1	1			
5	5EB–13411–00	STRAINER, OIL	1	1	1			
6	5EB–13415–00	SEAL, OIL STRAINER	1	1	1			
7	94580–25080	CHAIN	1	1	1			
8	5EB–13898–00	HOLDER	1	1	1			
9	90110–06001	BOLT, HEXAGON SOCKET HEAD	2	2	2			
10	5EB–13327–00	COVER, PUMP GEAR	1	1	1			
11	5EB–13416–00	PIPE, OIL 1	1	1	1			
12	93210–14579	O–RING	2	2	2			
13	90110–06226	BOLT, HEXAGON SOCKET HEAD	2	2	2			
14	5EB–13161–00	PIPE, DELIVERY 1	1	1	1			
15	5EB–1316E–00	PIPE, DELEVERY 5	1	1	1			
16	93210–09165	O–RING	2	2	2			
17	93210–06667	O–RING	1	1	1			

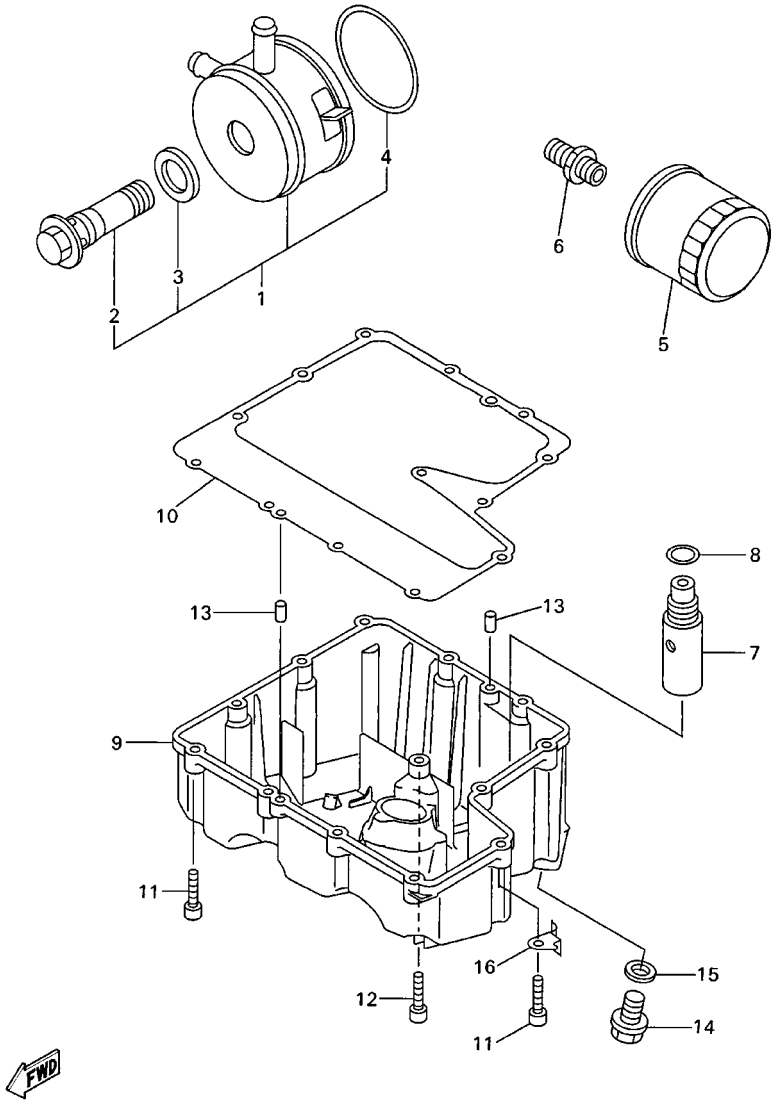

5EB3351-9080

FIG. 8 OIL CLEANER

REF. NO.	PART NO.	DESCRIPTION	5EB1	5EB2	5EB4			REMARKS
1	5EB–13470–00	OIL COOLER ASSY	1	1	1			
2	5EB–12822–00	.BOLT, UNION	1	1	1			
3	5EB–13475–00	.GASKET	1	1	1			
4	4JH–13473–00	.O–RING	1	1	1			
5	3FV–13440–00	ELEMENT ASSY, OIL CLEANER	1	1	1			
6	90401–20145	BOLT, UNION	1	1	1			
7	3KS–13490–00	RELIEF VALVE ASSY	1	1	1			
8	93210–15566	O–RING	1	1	1			
9	5EB–13417–00	COVER, STRAINER	1	1	1			
10	5EB–13414–00	GASKET, STRAINER COVER	1	1	1			
11	91317–06025	BOLT	12	12	12			
12	90110–06225	BOLT, HEXAGON SOCKET HEAD	1	1	1			
13	91808–17032	PIN, DOWEL	2	2	2			
14	90340–14132	PLUG, STRAIGHT SCREW	1	1	1			
15	214–11198–01	GASKET	1	1	1			
16	90465–10306	CLAMP	1	1	1			

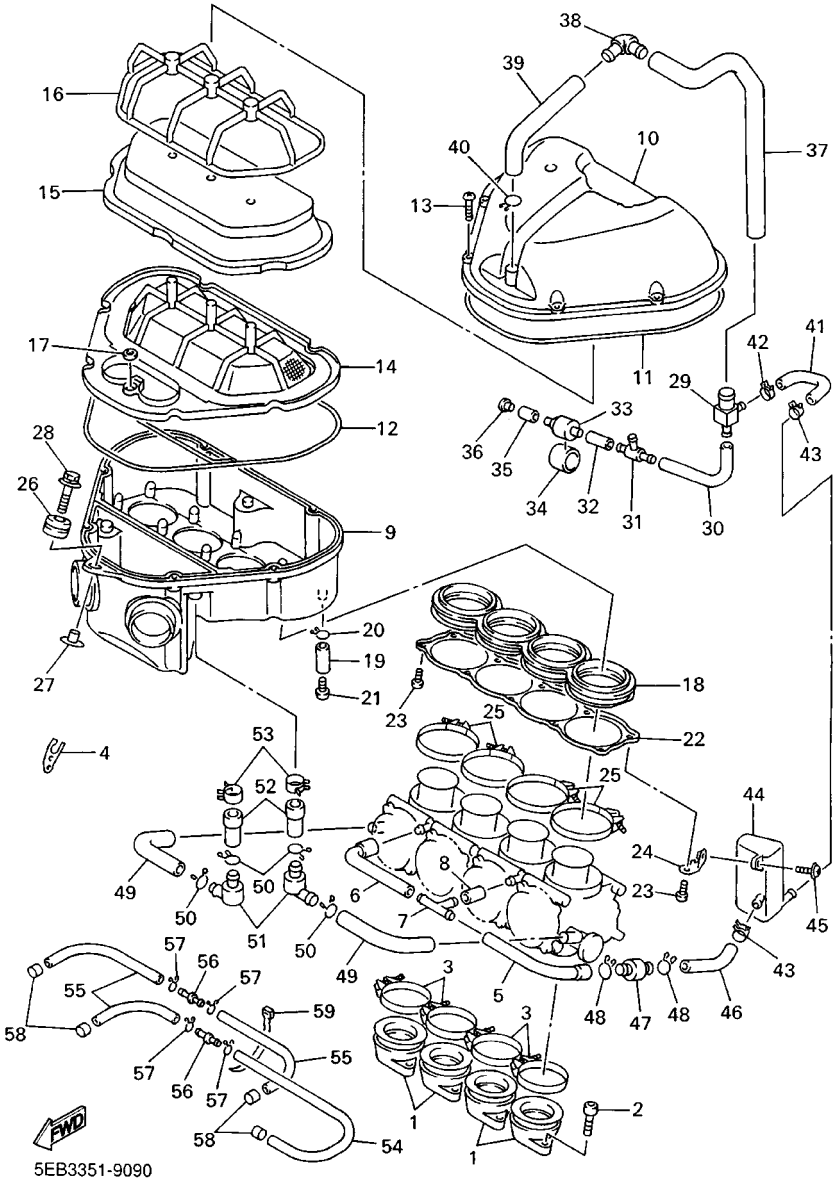

FIG. 9 INTAKE

REF. NO.	PART NO.	DESCRIPTION	5EB1	5EB2	5EB4			REMARKS
1	5EB–13586–00	JOINT, CARBURETOR 1	4	4	4			
2	91317–06020	BOLT	8	8	8			
3	90450–54093	HOSE CLAMP ASSY	4	4	4			
4	5EB–14413–00	STAY	1	1	1			
5	5EB–14349–00	PIPE	1	1	1			
6	5EB–14348–00	PIPE 1	1	1	1			
7	90413–10016	WAY 3	1	1	1			
8	90445–11795	HOSE	1	1	1			
9	5EB–14411–00	CASE, AIR CLEANER 1	1	1	1			
10	5EB–14421–00	CASE, AIR CLEANER 2	1	1	1			
11	5EB–14452–00	SEAL	1	1	1			
12	5EB–14462–00	SEAL	1	1	1			
13	98507–05025	SCREW, PAN HEAD	6	6	6			
14	5EB–14472–00	PLATE, ELEMENT	1	1	1			
15	5EB–14451–00	ELEMENT, AIR CLEANER	1	1	1			
16	5EB–14458–00	GUIDE	1	1	1			
17	5EB–1446R–00	SEAL	1	1	1			
18	5EB–14453–00	JOINT, AIR CLEANER 1	1	1	1			
19	90445–11795	HOSE	1	1	1			
20	90467–10041	CLIP	1	1	1			
21	90338–08174	PLUG	1	1	1			
22	5EB–14477–00	PLATE	1	1	1			
23	97707–50120	SCREW, TAPPING	10	10	10			
24	5EB–1441L–00	PANEL 1	1	1	1			
25	90450–68094	HOSE CLAMP ASSY	4	4	4			
26	90480–12314	GROMMET	1	1	1			
27	90387–065J6	COLLAR	1	1	1			

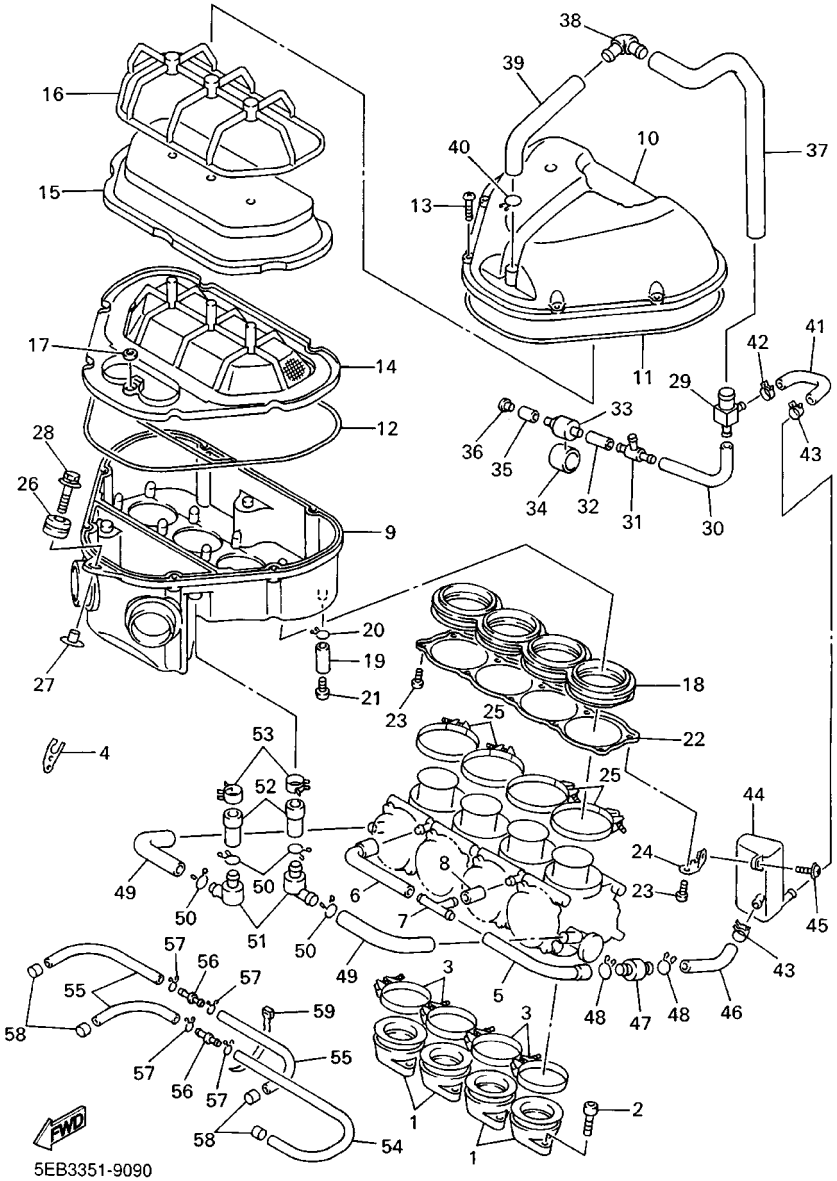

FIG. 9 INTAKE

REF. NO.	PART NO.	DESCRIPTION	5EB1	5EB2	5EB4			REMARKS
28	90119–06172	BOLT, WITH WASHER	1	1	1			
29	90413–18033	WAY 3	1	1	1			
30	4TV–14348–00	PIPE 1	1	1	1			
31	90413–09032	WAY 3	1	1	1			
32	90445–11147	HOSE	1	1	1			
33	4TV–14226–00	CUP, DRAIN	1	1	1			
34	90445–307K7	HOSE	1	1	1			
35	90445–11262	HOSE	1	1	1			
36	90338–08174	PLUG	1	1	1			
37	5EB–14197–00	PIPE	1	1	1			
38	5EB–14485–00	PIPE, JOINT	1	1	1			
39	5EB–14466–00	PIPE	1	1	1			
40	90467–20030	CLIP	1	1	1			
41	5EB–14419–01	PIPE	1	1	1			
42	90467–16098	CLIP	1	1	1			
43	90467–15054	CLIP	2	2	2			
44	5EB–13581–01	CHAMBER, AIR	1	1	1			
45	90159–05028	SCREW, WITH WASHER	1	1	1			
46	5EB–1444J–01	PIPE	1	1	1			
47	4X7–14467–01	SEAL	1	1	1			
48	90467–15197	CLIP	2	2	2			
49	5EB–1443J–00	PIPE	2	2	2			
50	90467–15012	CLIP	4	4	4			
51	3LN–24515–00	NET, FILTER 2	2	2	2			
52	5EB–14148–00	PIPE	2	2	2			
53	90467–17128	CLIP	2	2	2			
54	90445–09500	HOSE	1	1	1			

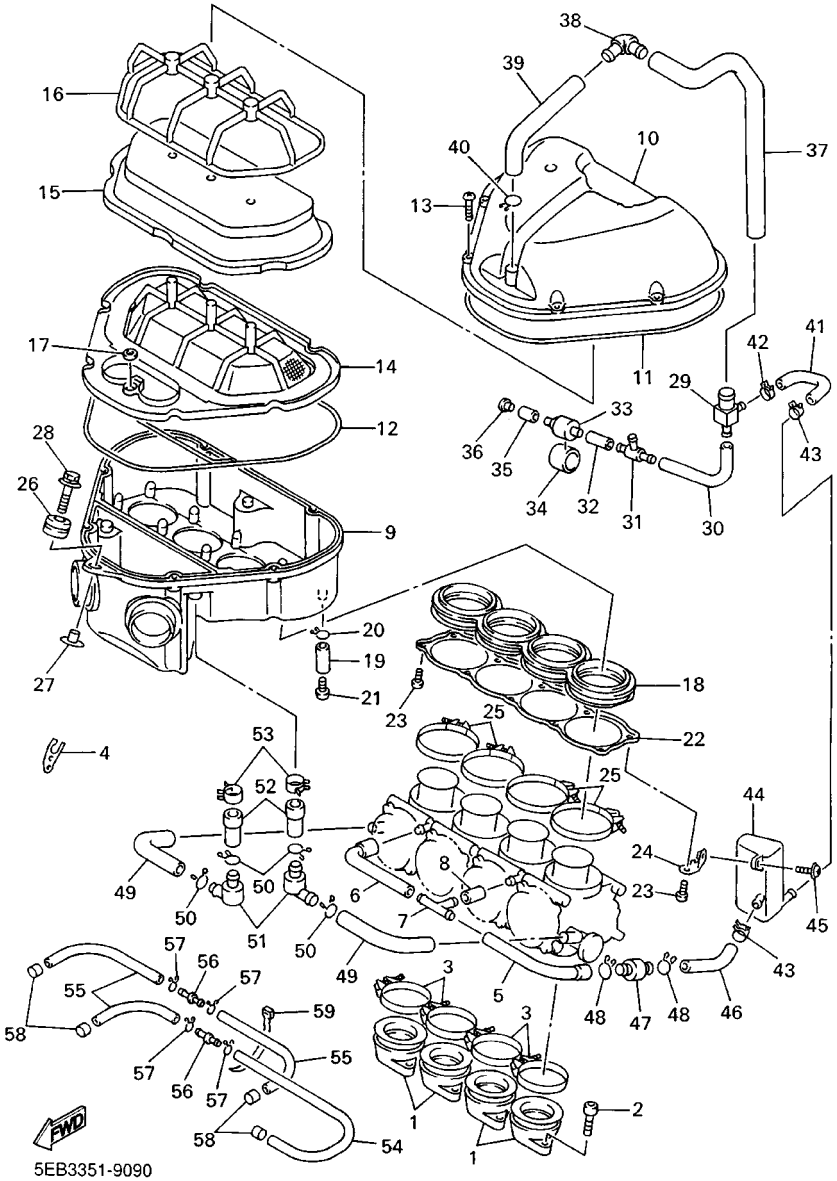

FIG. 9 INTAKE

REF. NO.	PART NO.	DESCRIPTION	5EB1	5EB2	5EB4			REMARKS
55	90445–09541	HOSE	3	3	3			
56	90338–05271	PLUG	2	2	2			
57	90467–08017	CLIP	4	4	4			
58	90467–09037	CLIP	4	4	4			
59	90464–13073	CLAMP	1	1	1			

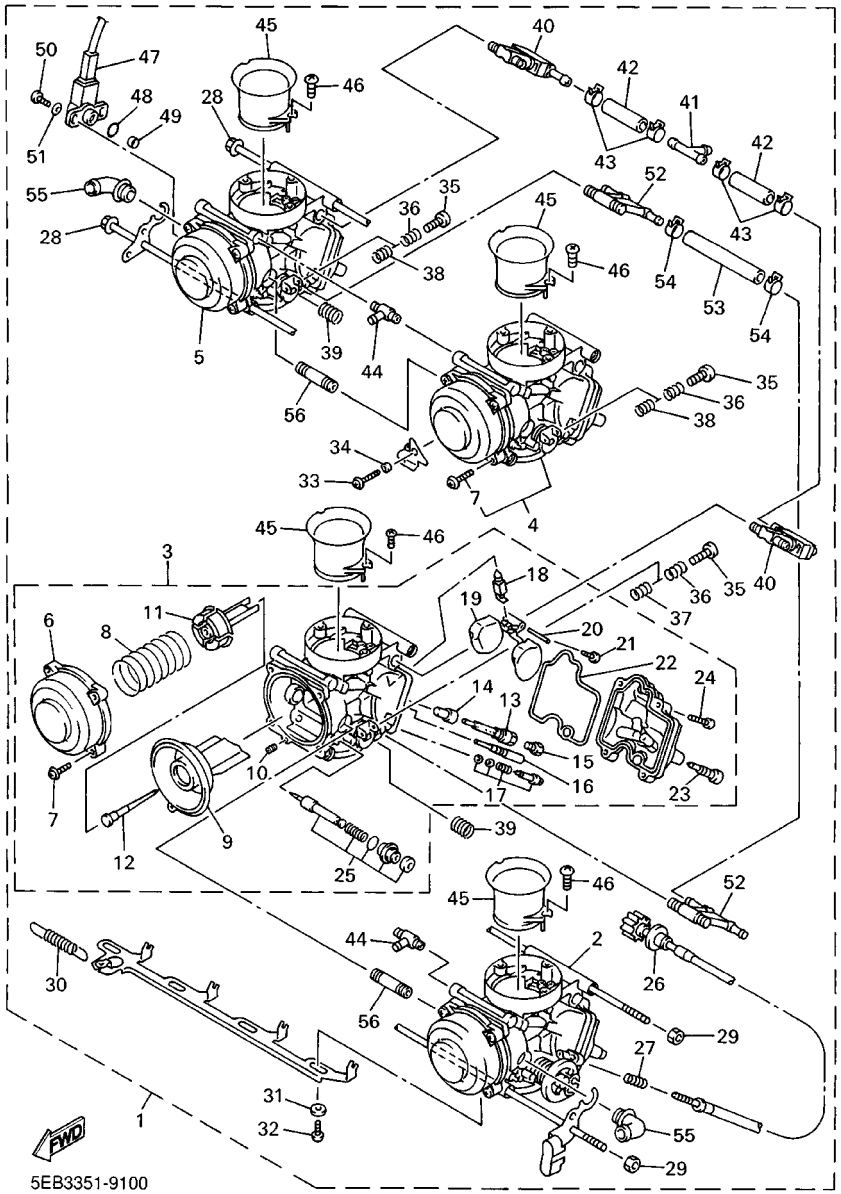

FIG. 10 CARBURETOR

REF. NO.	PART NO.	DESCRIPTION	5EB1	5EB2	5EB4			REMARKS
1	5EB–14900–00	CARBURETOR ASSY	1		1			
	5EB–14900–10	CARBURETOR ASSY		1				
2	5EB–14901–00	.CARBURETOR ASSY 1	1		1			
	5EB–14901–10	.CARBURETOR ASSY 1		1				
3	5EB–14902–00	.CARBURETOR ASSY 2	1		1			
	5EB–14902–10	.CARBURETOR ASSY 2		1				
4	5EB–14903–00	.CARBURETOR ASSY 3	1		1			
	5EB–14903–10	.CARBURETOR ASSY 3		1				
5	5EB–14904–00	.CARBURETOR ASSY 4	1		1			
	5EB–14904–10	.CARBURETOR ASSY 4		1				
6	5EB–14958–00	..COVER, DIAPHRAGM	1		1			
	5EB–14958–10	..COVER, DIAPHRAGM		1				
7	4JH–14216–00	..SCREW	3	3	3			UR #3
	4JH–14216–00	..SCREW	4	4	4			UR #1,2,4
8	5EB–14933–00	..SPRING, DIAPHRAGM	1	1	1			
9	5EB–14940–00	..DIAPHRAGM ASSY	1	1	1			
10	4JH–14515–00	..JET	1	1	1			
11	5EB–14936–00	..SEAT, SPRING	1	1	1			
*12	5EB–14916–00	..NEEDLE (N7RA)	1		1			UR #1,4
	5EB–14916–20	..NEEDLE (N7TA)		1				UR #1,4
	5EB–14916–10	..NEEDLE (N7SA)	1		1			UR #2,3
	5EB–14916–30	..NEEDLE (N7UA)		1				UR #2,3
13	5EB–1414G–00	..PIPE, MAIN BREED	1	1	1			
14	5EB–14244–00	..HOLDER, NOZZLE	1	1	1			
15	3TJ–14943–88	..JET, MAIN (#152)	1	1	1			UR #1,4
	3TJ–14943–87	..JET, MAIN (#148)	1	1	1			UR #2,3
16	5EB–14948–02	..JET (#38)	1	1	1			

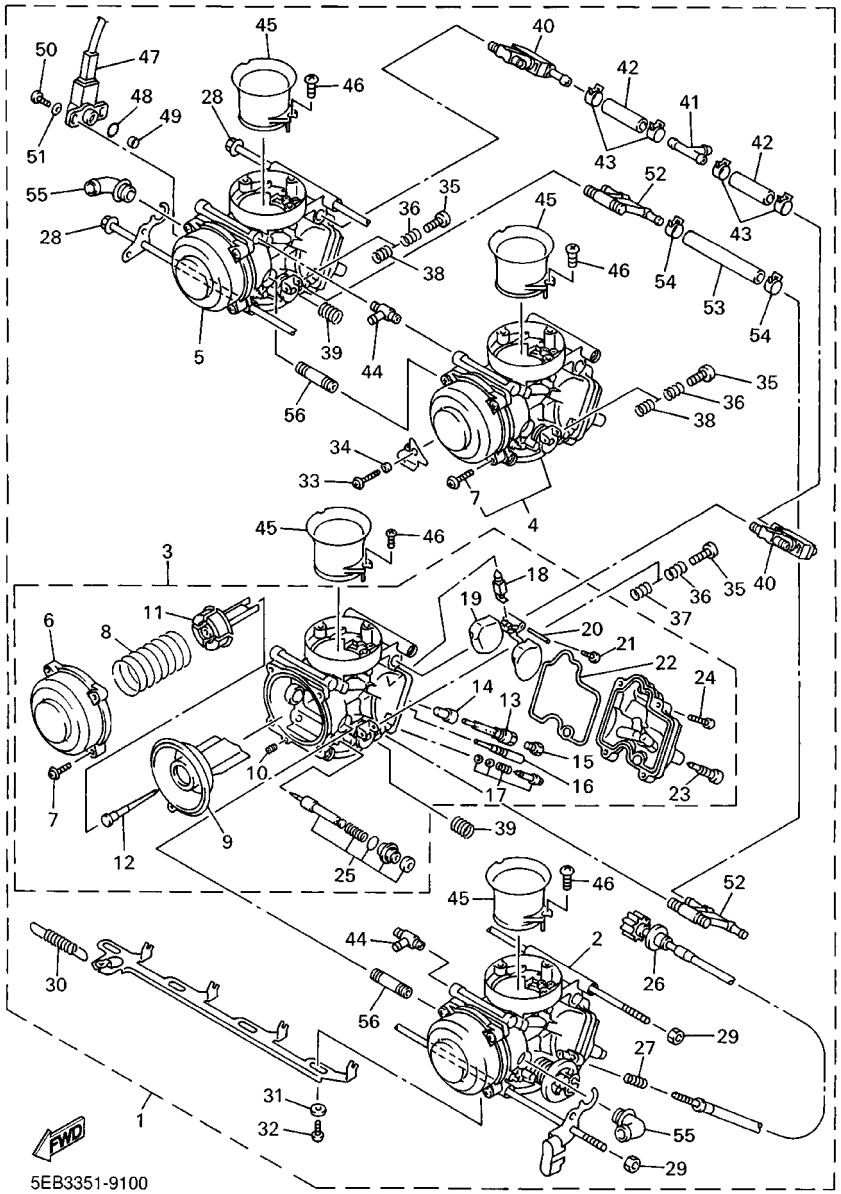

FIG. 10 CARBURETOR

REF. NO.	PART NO.	DESCRIPTION	5EB1	5EB2	5EB4			REMARKS
17	5EB–14105–00	..PILOT SCREW SET	1	1	1			
18	5EB–14107–00	..NEEDLE VALVE SET	1	1	1			
19	5EB–14985–00	..FLOAT	1	1	1			
20	676–14548–00	..PIN, FLOAT ARM	1	1	1			
21	688–14592–00	..SCREW	1	1	1			
22	5EB–14984–00	..GASKET, FLOAT CHAMBER	1	1	1			
23	3TJ–14191–40	..PLUG, DRAIN	1	1	1			
24	98502–04014	..SCREW, PAN HEAD	4	4	4			
25	4YR–1410A–00	..STARTER SET	1	1	1			
26	5EB–14922–00	.SCREW, THROTTLE	1	1	1			
27	4JH–14934–00	.SPRING, THROTTLE STOP	1	1	1			
28	5EB–14162–00	.BOLT, HOLDING	2	2	2			
29	4JH–14358–00	.NUT	2	2	2			
30	5EB–14935–00	.SPRING	1	1	1			
31	90202–06056	.WASHER, PLATE	6	6	6			
32	3TJ–14245–40	.SCREW, GUIDE	3	3	3			
33	4JH–14565–00	.SCREW	1	1	1			
34	4JH–14264–00	.COLLAR	1	1	1			
35	5EB–14121–00	.SCREW, THROTTLE STOP	3	3	3			
36	7A9–14555–00	.SPRING	3	3	3			
37	4YR–14133–00	.SPRING, THROTTLE STOP	1	1	1			
38	4JH–14133–00	.SPRING, THROTTLE STOP	2	2	2			
39	4JH–14487–00	.SPRING	2	2	2			
40	4JH–14350–00	.PIPE ADAPTOR ASSY	2	2	2			
41	4JH–13918–00	.PIPE T	1	1	1			
42	5EB–14298–00	.PIPE	2	2	2			
43	4JH–14137–00	.CLIP	4	4	4			

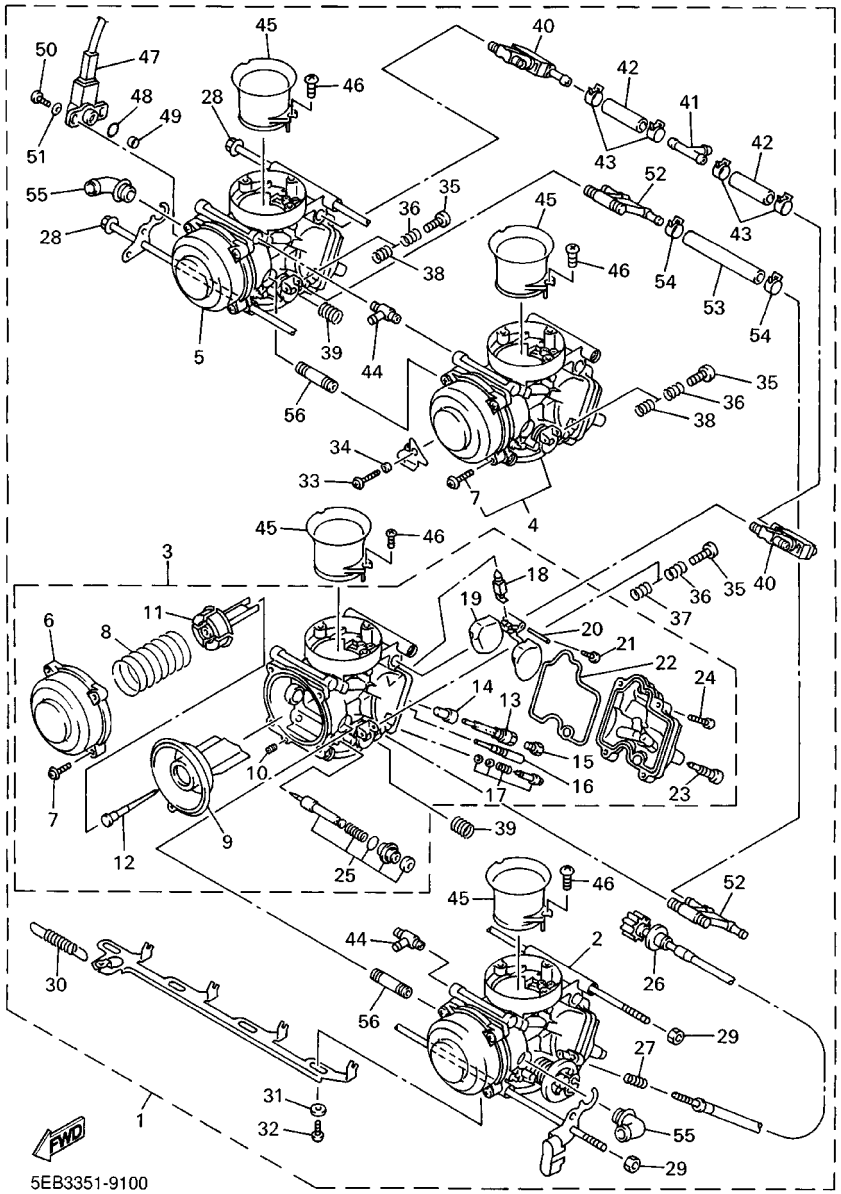

FIG. 10 CARBURETOR

REF. NO.	PART NO.	DESCRIPTION	5EB1	5EB2	5EB4			REMARKS
*44	5EB–14197–01	.PIPE	2	2	2			
45	5EB–1440F–00	.JOINT, AIR FILTER 1	4	4	4			
46	3TJ–14216–40	.SCREW	8	8	8			
47	4TV–85885–00	.THROTTLE POSITION SENSOR ASSY	1	1	1			
48	4TV–14562–00	.O–RING	1	1	1			
49	4TV–14534–00	.COLLAR	1	1	1			
50	4TV–14216–00	.SCREW	2	2	2			
51	4TV–14557–00	.WASHER	2	2	2			
52	5EB–12446–00	.JOINT	2	2	2			
53	5EB–12576–00	.HOSE 1	1	1	1			
54	4TV–12486–00	.CLIP	2	2	2			
55	5EB–14251–00	.NIPPLE	2	2	2			
56	5EB–14454–00	.JOINT	2	2	2			

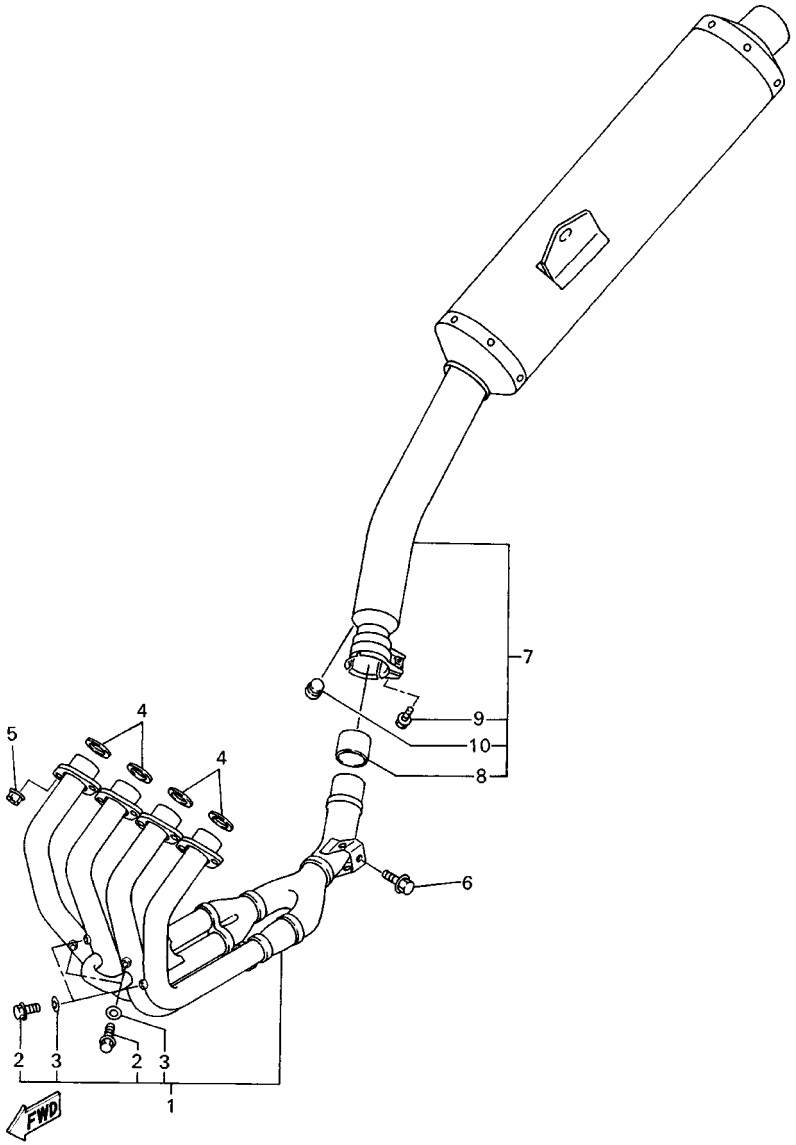

5EB3351-9110

FIG. 11 EXHAUST

REF. NO.	PART NO.	DESCRIPTION	5EB1	5EB2	5EB4			REMARKS
1	5EB–14602–00	EXHAUST PIPE COMP.	1	1	1			
2	97080–06008	.BOLT	4	4	4			
3	92990–06600	.WASHER, PLATE	4	4	4			
4	3YF–14613–01	GASKET, EXHAUST PIPE	4	4	4			
5	90179–08410	NUT	8	8	8			
6	95817–08035	BOLT, FLANGE	1	1	1			
7	5EB–14710–00	MUFFLER ASSY 1	1	1	1			
8	5EB–14714–00	.GASKET, MUFFLER	1	1	1			
9	95814–08025	.BOLT, FLANGE	1	1	1			
10	4FM–24181–00	.DAMPER, LOCATING 1	1	1	1			

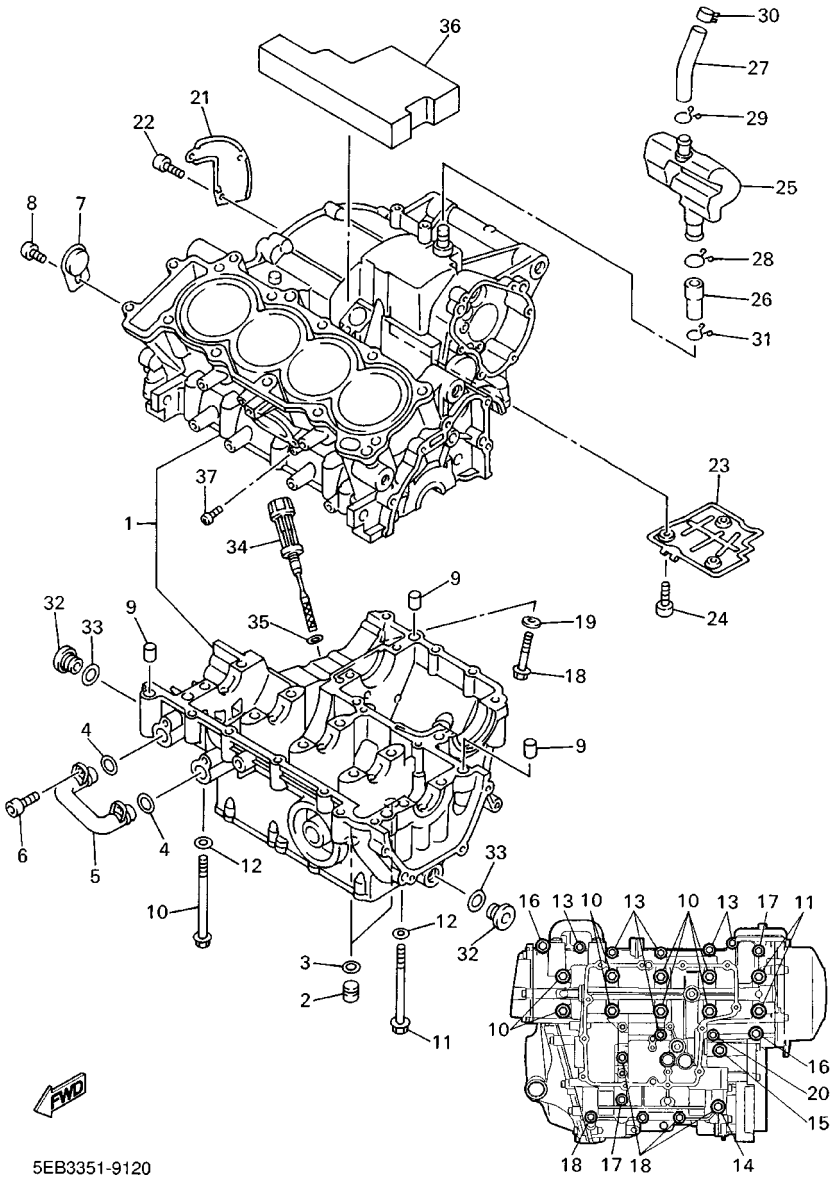

FIG. 12 CRANKCASE

REF. NO.	PART NO.	DESCRIPTION	5EB1	5EB2	5EB4			REMARKS
1	5EB–15100–00	CRANKCASE ASSY	1	1	1			
2	90338–16262	PLUG	2	2	2			
3	93210–12790	O–RING	2	2	2			
4	93210–14579	O–RING	2	2	2			
5	5EB–13418–00	PIPE, OIL 2	1	1	1			
6	90110–06091	BOLT, HEXAGON SOCKET HEAD	2	2	2			
7	5EB–15189–00	PLUG	1	1	1			
8	92017–06014	BOLT, BUTTON HEAD	1	1	1			
9	99530–10014	PIN, DOWEL	3	3	3			
10	90105–087A0	BOLT, WASHER BASED	8	8	8			
11	90105–086A9	BOLT, WASHER BASED	2	2	2			
12	90201–087K3	WASHER, PLATE	10	10	10			
13	95817–06055	BOLT, FLANGE	6	6	6			
14	95817–08065	BOLT, FLANGE	1	1	1			
15	90105–08776	BOLT, WASHER BASED	1	1	1			
16	90109–065G3	BOLT	2	2	2			
17	95817–06065	BOLT, FLANGE	2	2	2			
18	95817–06045	BOLT, FLANGE	4	4	4			
19	90430–06014	GASKET	1	1	1			
20	90105–06006	BOLT, WASHER BASED	1	1	1			
21	5EB–11165–01	PLATE, BREATHER	1	1	1			
22	90149–06001	SCREW	3	3	3			
23	5EB–11145–00	PLATE, BREATHER 2	1	1	1			
24	90110–06226	BOLT, HEXAGON SOCKET HEAD	3	3	3			
25	5EB–15371–00	BREATHER	1	1	1			
26	5EB–15393–00	PIPE, BREATHER 2	1	1	1			
27	5EB–15373–00	PIPE, BREATHER	1	1	1			

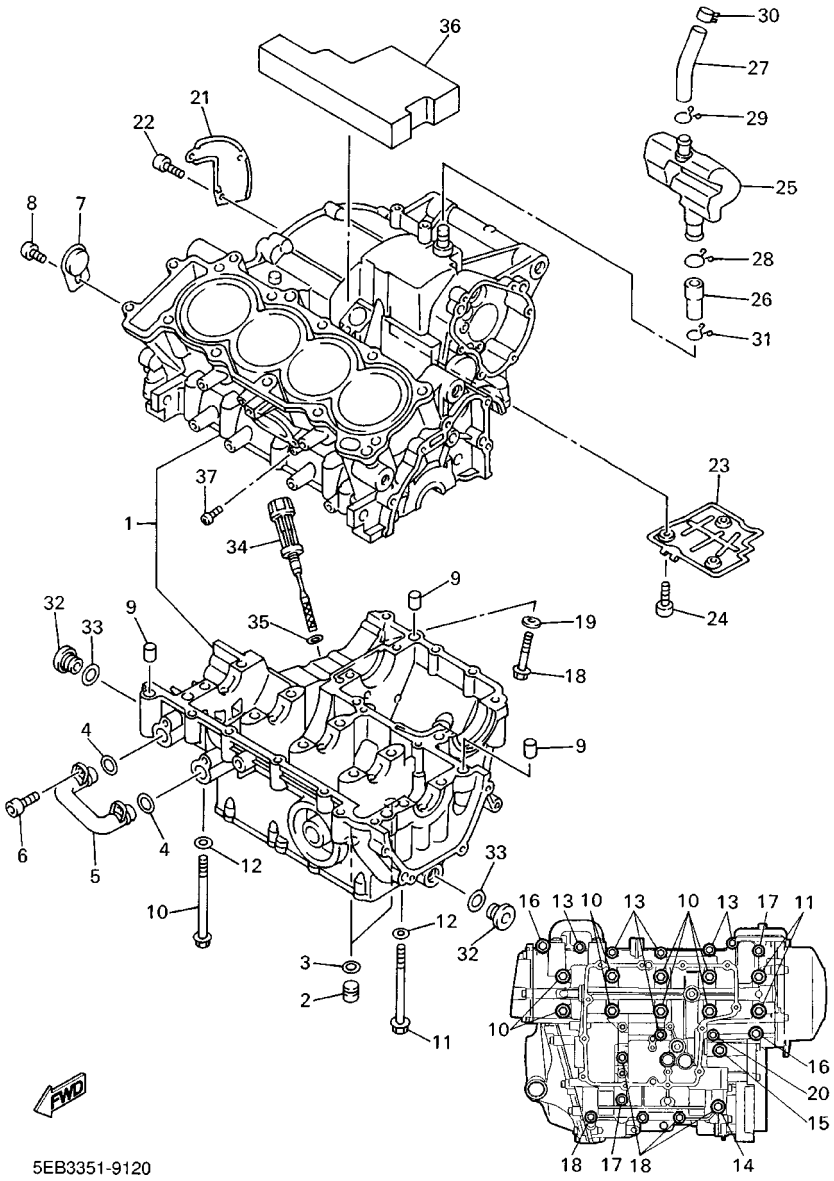

FIG. 12 CRANKCASE

REF. NO.	PART NO.	DESCRIPTION	5EB1	5EB2	5EB4			REMARKS
28	90467–18196	CLIP	1	1	1			
29	90467–16195	CLIP	1	1	1			
30	90467–15054	CLIP	1	1	1			
31	90467–14015	CLIP	1	1	1			
32	36Y–15189–00	PLUG	2	2	2			
33	93210–16325	O–RING	2	2	2			
34	5EB–15362–00	PLUG, OIL LEVEL	1	1	1			
35	93210–09165	O–RING	1	1	1			
36	5EB–15316–00	DAMPER, ENGINE MOUNT 1	1	1	1			
37	98907–06012	SCREW, BIND	1	1	1			

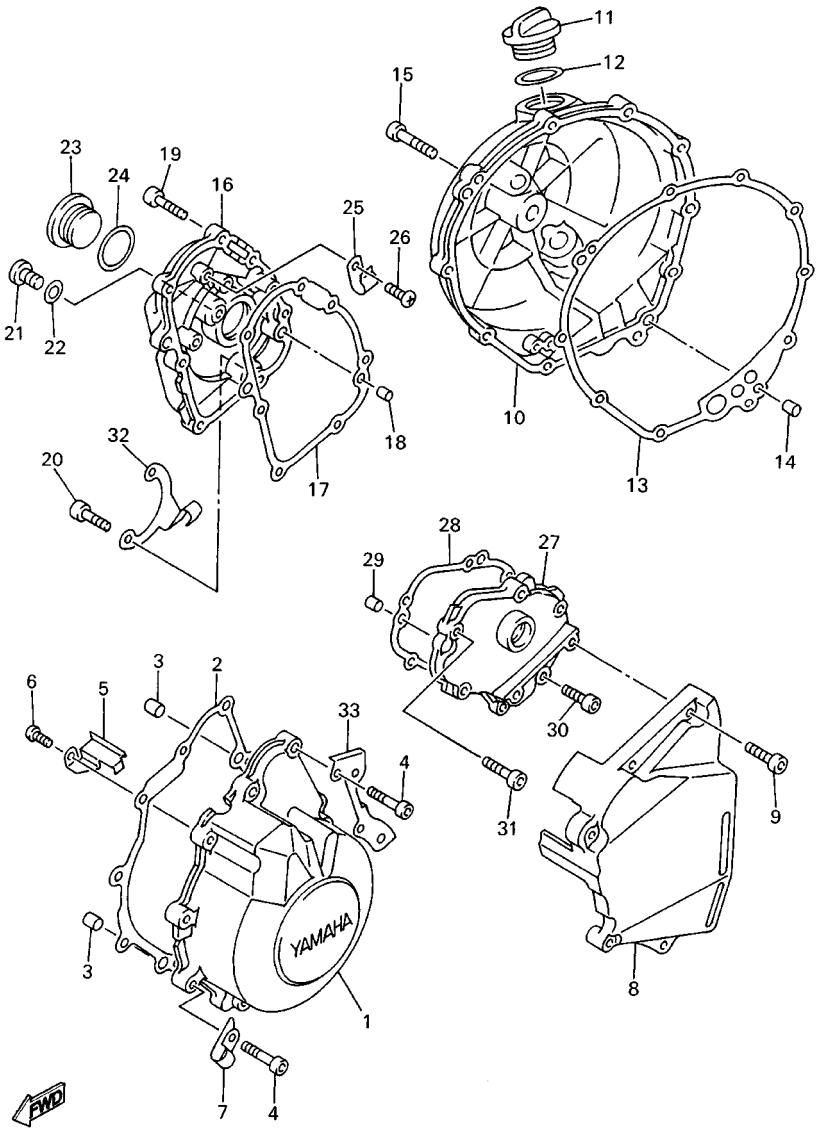

5EB3351-9130

FIG. 13 CRANKCASE COVER 1

REF. NO.	PART NO.	DESCRIPTION	5EB1	5EB2	5EB4			REMARKS
1	5EB–15411–00	COVER, CRANKCASE 1	1	1	1			
2	5EB–15451–00	GASKET, CRANKCASE COVER 1	1	1	1			
3	99530–08012	PIN, DOWEL	2	2	2			
4	91314–06025	BOLT	9	9	9			
5	5EB–15484–00	CLAMP 2	1	1	1			
6	98507–06008	SCREW, PAN HEAD	1	1	1			
7	90461–10136	CLAMP	1	1	1			
8	5EB–15418–00	COVER, CHAIN CASE	1	1	1			
9	91314–06025	BOLT	5	5	5			
10	5EB–15421–01	COVER, CRANKCASE 2	1	1	1			
11	3F9–15362–00	PLUG, OIL LEVEL	1	1	1			
12	93210–27194	O–RING	1	1	1			
13	5EB–15461–00	GASKET, CRANKCASE COVER 2	1	1	1			
14	93608–17263	PIN, DOWEL	2	2	2			
15	91314–06025	BOLT	10	10	10			
16	5EB–15416–00	COVER, OIL PUMP	1	1	1			
17	5EB–15456–00	GASKET, OIL PUMP COVER 1	1	1	1			
18	99530–08012	PIN, DOWEL	2	2	2			
19	91314–06020	BOLT	5	5	5			
20	91314–06025	BOLT	2	2	2			
21	92014–08012	BOLT, BUTTON HEAD	1	1	1			
22	90430–08143	GASKET	1	1	1			
23	90340–32116	PLUG, STRAIGHT SCREW	1	1	1			
24	93210–32172	O–RING	1	1	1			
25	90462–10182	CLAMP	1	1	1			
26	98507–06008	SCREW, PAN HEAD	1	1	1			
*27	5EB–15425–00	COVER, 2	1	1	1			

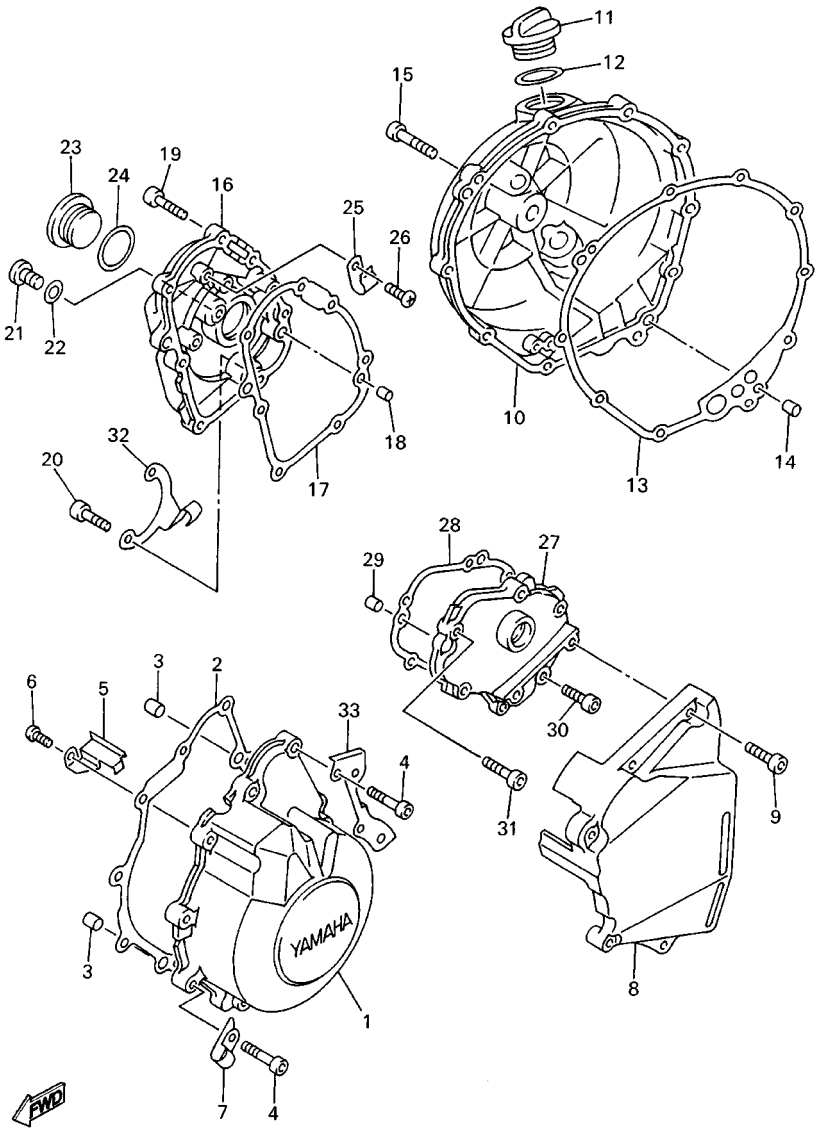

5EB3351-9130

FIG. 13 CRANKCASE COVER 1

REF. NO.	PART NO.	DESCRIPTION	5EB1	5EB2	5EB4			REMARKS
*28	5EB–15463–00	GASKET, COVER 2	1	1	1			
29	99530–08012	PIN, DOWEL	2	2	2			
30	91314–06018	BOLT	2	2	2			
31	91314–06025	BOLT	4	4	4			
32	5EB–15441–00	HOLDER, CLUTCH CABLE	1	1	1			
33	5EB–1541A–00	STAY,CRANKCASECOVER 1	1	1	1			

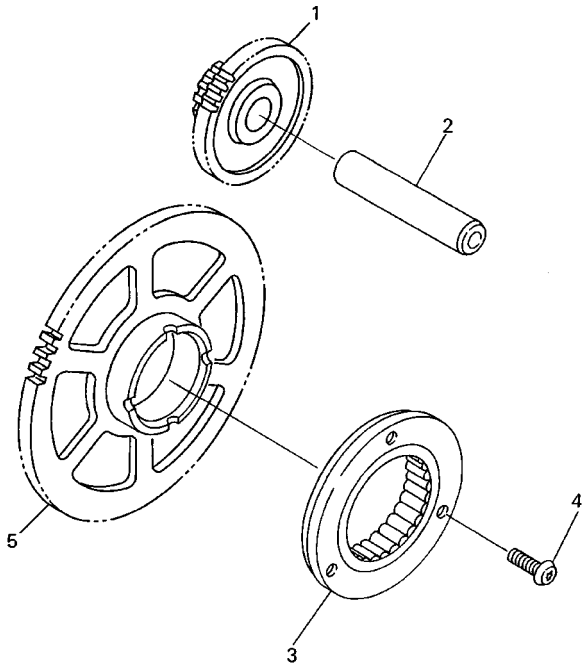

5EB3351-9140

FIG. 14 STARTER

REF. NO.	PART NO.	DESCRIPTION	5EB1	5EB2	5EB4			REMARKS
1	5EB–15512–00	GEAR, IDLER 1	1	1	1			
2	5EB–15521–00	SHAFT 1	1	1	1			
3	5BP–15590–00	STARTER ONE–WAY ASSY	1	1	1			
4	90149–08329	SCREW	3	3	3			
5	5EB–15515–00	GEAR 3	1	1	1			

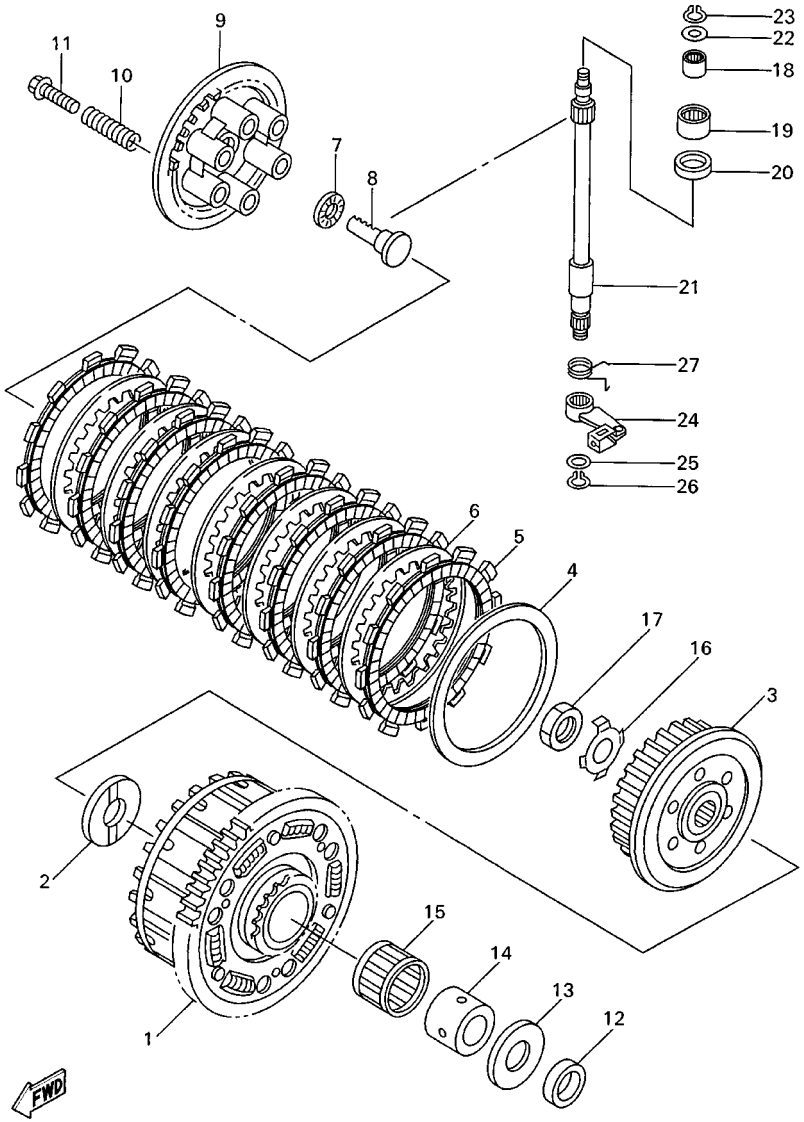

FIG. 15 CLUTCH

REF. NO.	PART NO.	DESCRIPTION	5EB1	5EB2	5EB4			REMARKS
1	5EB–16150–00	PRIMARY DRIVEN GEAR COMP.	1	1	1			
2	5EB–16154–00	PLATE, THRUST 1	1	1	1			
3	5EB–16371–00	BOSS, CLUTCH	1	1	1			
4	168–16324–00	PLATE, CLUTCH 1	1	1	1			
5	4FN–16321–00	PLATE, FRICTION	8	8	8			
6	3J2–16324–00	PLATE, CLUTCH 1	7	7	7			
7	93306–00304	BEARING (B6003C4)	1	1	1			
8	5EB–16356–01	ROD, PUSH 1	1	1	1			
9	5EB–16351–01	PLATE, PRESSURE 1	1	1	1			
10	90501–225A9	SPRING, COMPRESSION	6	6	6			
11	90159–06002	SCREW, WITH WASHER	6	6	6			
12	90201–255A6	WASHER, PLATE	1	1	1			
13	1AE–16164–00	PLATE, THRUST 2	1	1	1			
14	90560–25270	SPACER	1	1	1			
15	93310–340N8	BEARING	1	1	1			
16	90215–20231	WASHER, LOCK	1	1	1			
17	90170–20327	NUT	1	1	1			
18	93317–11020	BEARING	1	1	1			
19	93315–31502	BEARING	1	1	1			
20	93102–15212	OIL SEAL	1	1	1			
21	5EB–16382–00	AXLE, PUSH LEVER	1	1	1			
22	92907–08600	WASHER, PLATE	1	1	1			
23	99001–07600	CIRCLIP	1	1	1			
24	5EB–16340–00	PUSH LEVER ASSY	1	1	1			
25	90201–10614	WASHER, PLATE	1	1	1			
26	99001–09600	CIRCLIP	1	1	1			
27	90508–165B1	SPRING, TORSION	1	1	1			

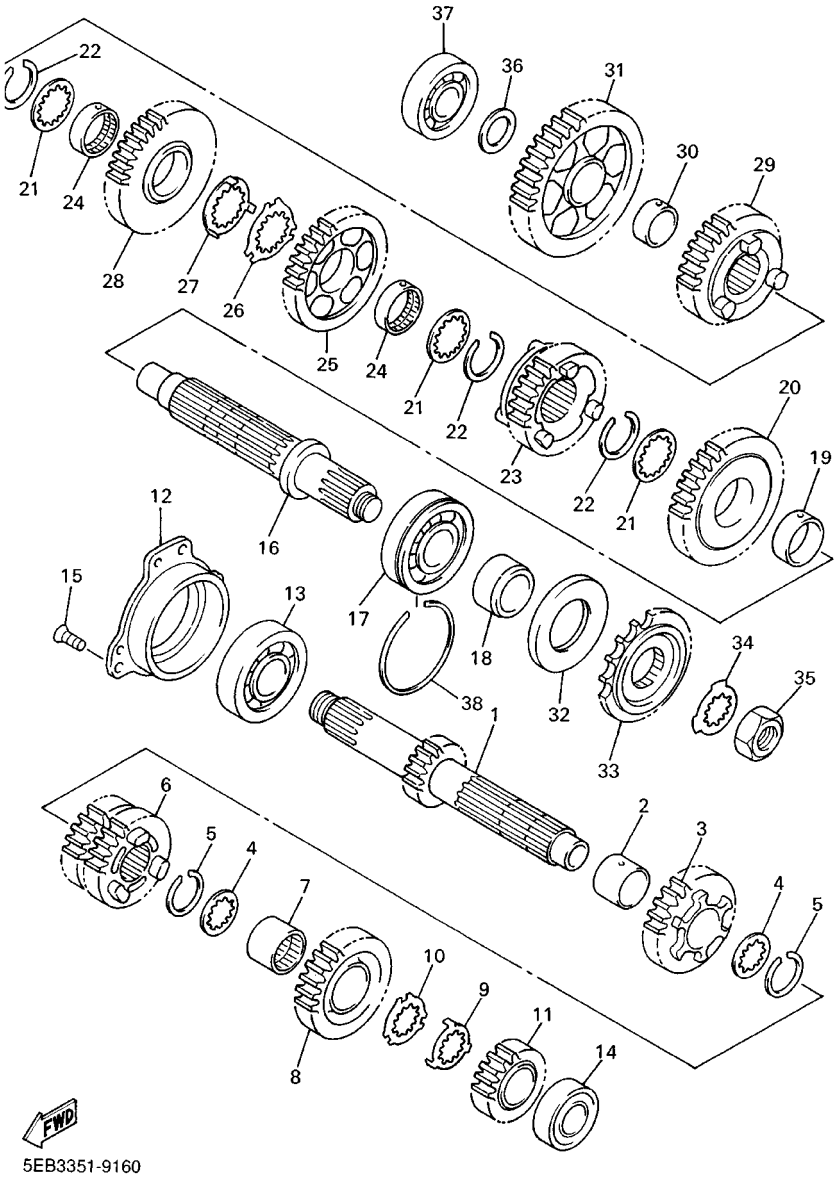

FIG. 16 TRANSMISSION

REF. NO.	PART NO.	DESCRIPTION	5EB1	5EB2	5EB4			REMARKS
1	5EB–17411–00	AXLE, MAIN (13T)	1	1	1			
2	90387–253M6	COLLAR	1	1	1			
3	5EB–17151–00	GEAR, 5TH PINION (21T)	1	1	1			
4	90209–21332	WASHER	2	2	2			
5	93440–25084	CIRCLIP	2	2	2			
6	5EB–17131–00	GEAR, 3RD/4TH PINION (18T/24T)	1	1	1			
7	90387–2513E	COLLAR	1	1	1			
8	5EB–17161–00	GEAR, 6TH PINION (24T)	1	1	1			
9	90209–22352	WASHER	1	1	1			
10	90209–21351	WASHER	1	1	1			
11	5EB–17121–00	GEAR, 2ND PINION (13T)	1	1	1			
12	5EB–15163–00	HOUSING, BEARING 1	1	1	1			
13	93306–30525	BEARING (B6305)	1	1	1			
14	93306–20464	BEARING	1	1	1			
15	90149–06285	SCREW	3	3	3			
16	5EB–17421–00	AXLE, DRIVE	1	1	1			
17	93306–30546	BEARING (B6305A5 SPECIAL)	1	1	1			
18	90387–2504A	COLLAR	1	1	1			
19	90387–2813C	COLLAR	1	1	1			
20	5EB–17221–00	GEAR, 2ND WHEEL (37T)	1	1	1			
21	90209–25342	WASHER	3	3	3			
22	93440–28062	CIRCLIP	3	3	3			
23	5EB–17261–00	GEAR, 6TH WHEEL (26T)	1	1	1			
24	90387–2813D	COLLAR	2	2	2			
25	5EB–17241–00	GEAR, 4TH WHEEL (32T)	1	1	1			
26	90209–25349	WASHER	1	1	1			
27	90209–25350	WASHER	1	1	1			

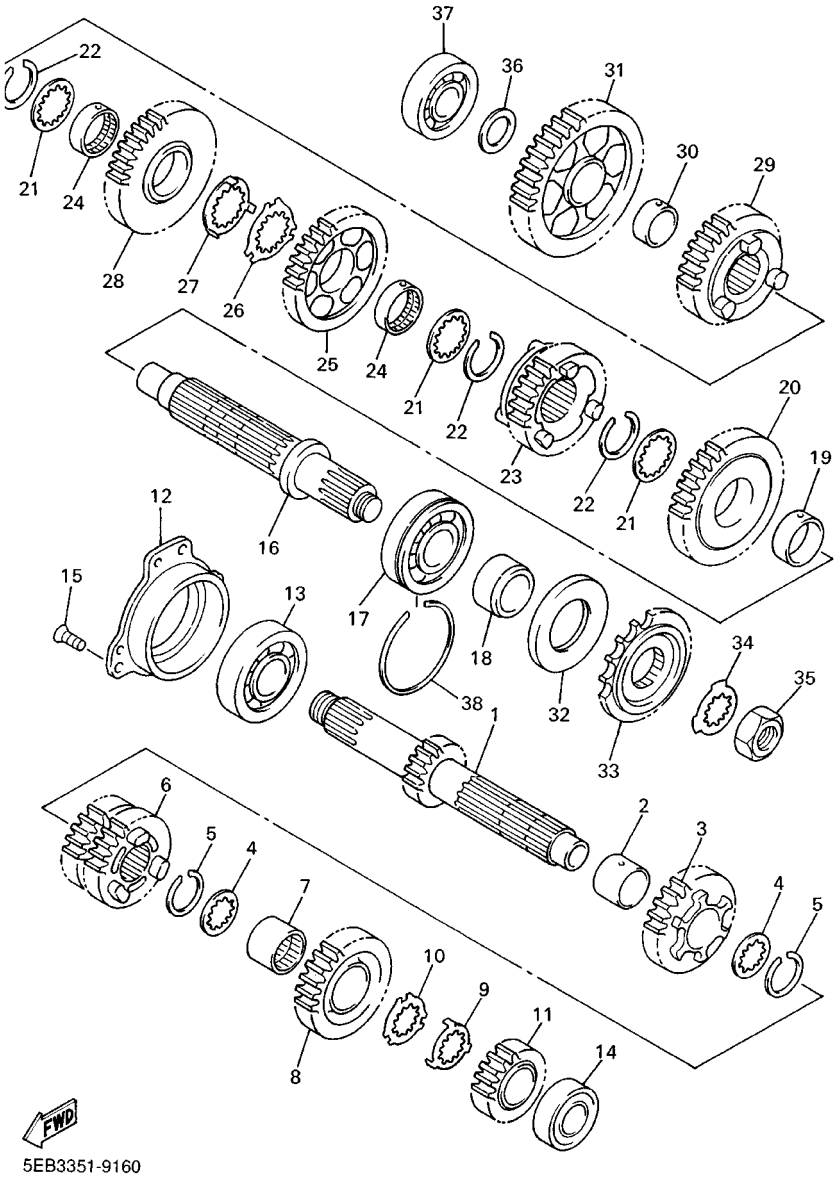

FIG. 16 TRANSMISSION

REF. NO.	PART NO.	DESCRIPTION	5EB1	5EB2	5EB4			REMARKS
28	5EB–17231–00	GEAR, 3RD WHEEL (28T)	1	1	1			
29	5EB–17251–00	GEAR, 5TH WHEEL (25T)	1	1	1			
30	90387–2202V	COLLAR	1	1	1			
31	5EB–17211–00	GEAR, 1ST WHEEL (37T)	1	1	1			
32	93102–35423	OIL SEAL	1	1	1			
33	2GH–17460–00	SPROCKET,DRIVE 16T(2GH1746160)	1	1	1			
34	90215–21022	WASHER, LOCK	1	1	1			
35	90179–18020	NUT	1	1	1			
36	90201–20278	WASHER, PLATE	1	1	1			
37	93306–20464	BEARING	1	1	1			
38	278–17424–01	CIRCLIP 1	1	1	1			

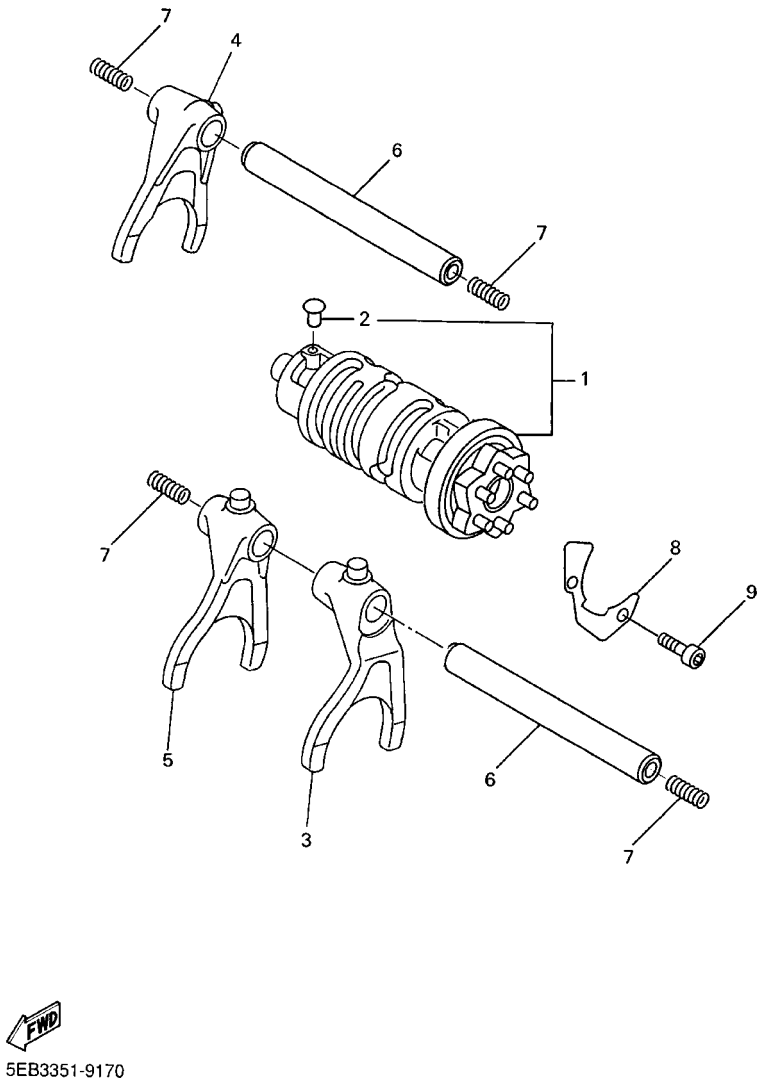

FIG. 17 SHIFT CAM. FORK

REF. NO.	PART NO.	DESCRIPTION	5EB1	5EB2	5EB4			REMARKS
1	5EB–18540–00	SHIFT CAM ASSY	1	1	1			
2	136–18542–00	.POINT, NEUTRAL	1	1	1			
3	5EB–18511–00	FORK, SHIFT 1	1	1	1			
4	5EB–18512–00	FORK, SHIFT 2	1	1	1			
5	5EB–18513–00	FORK, SHIFT 3	1	1	1			
6	4XV–18531–00	BAR, SHIFT FORK GUIDE 1	2	2	2			
7	90501–064L1	SPRING, COMPRESSION	4	4	4			
8	5EB–18536–00	STOPPER, SHIFT BAR	1	1	1			
9	90110–06226	BOLT, HEXAGON SOCKET HEAD	2	2	2			

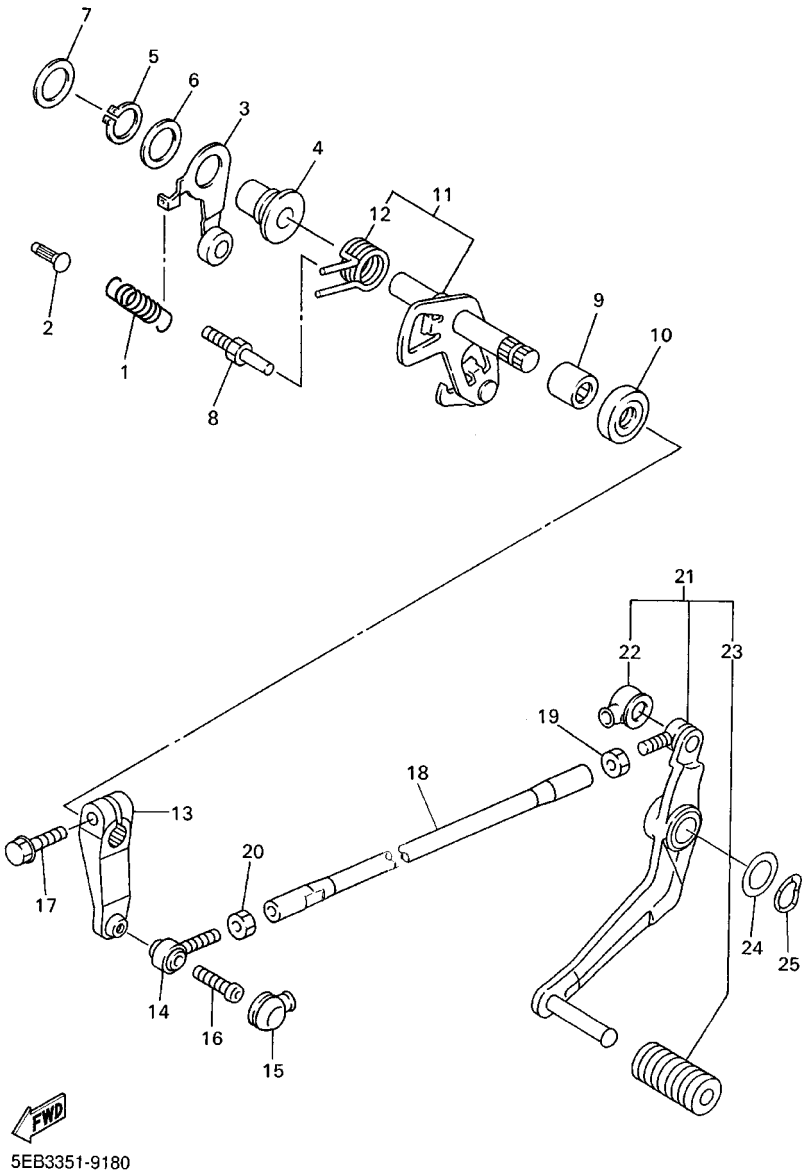

FIG. 18 SHIFT SHAFT

REF. NO.	PART NO.	DESCRIPTION	5EB1	5EB2	5EB4			REMARKS
1	90506–13535	SPRING, TENSION	1	1	1			
2	132–16346–00	HOOK, SPRING	1	1	1			
3	4XV–18140–00	STOPPER LEVER ASSY	1	1	1			
4	90387–127V3	COLLAR	1	1	1			
5	99009–17400	CIRCLIP	1	1	1			
6	90201–177G4	WASHER, PLATE	1	1	1			
7	90201–154E8	WASHER, PLATE (1.0T)	1	1	1			
8	4XV–18127–00	STOPPER, SCREW	1	1	1			
9	93315–11206	BEARING	1	1	1			
10	93101–12004	OIL SEAL	1	1	1			
11	5EB–18101–01	SHIFT SHAFT ASSY	1	1	1			
12	90508–295B2	.SPRING, TORSION	1	1	1			
13	5EB–18112–01	ARM, SHIFT	1	1	1			
14	3TC–18116–00	JOINT, ROD 1	1	1	1			
15	4XV–18154–00	COVER, DUST	1	1	1			
16	92017–06020	BOLT, BUTTON HEAD	1	1	1			
17	95824–06020	BOLT, FLANGE	1	1	1			
18	5EB–18115–00	ROD, SHIFT	1	1	1			
19	90170–08358	NUT	1	1	1			
20	95304–06700	NUT	1	1	1			
21	5EB–18110–00	SHIFT PEDAL ASSY	1	1	1			
22	2H9–18154–00	.COVER, DUST	1	1	1			
23	5EB–18113–00	.COVER, SHIFT PEDAL	1	1	1			
24	90201–12013	WASHER, PLATE	1	1	1			
25	90206–12074	WASHER, WAVE	1	1	1			

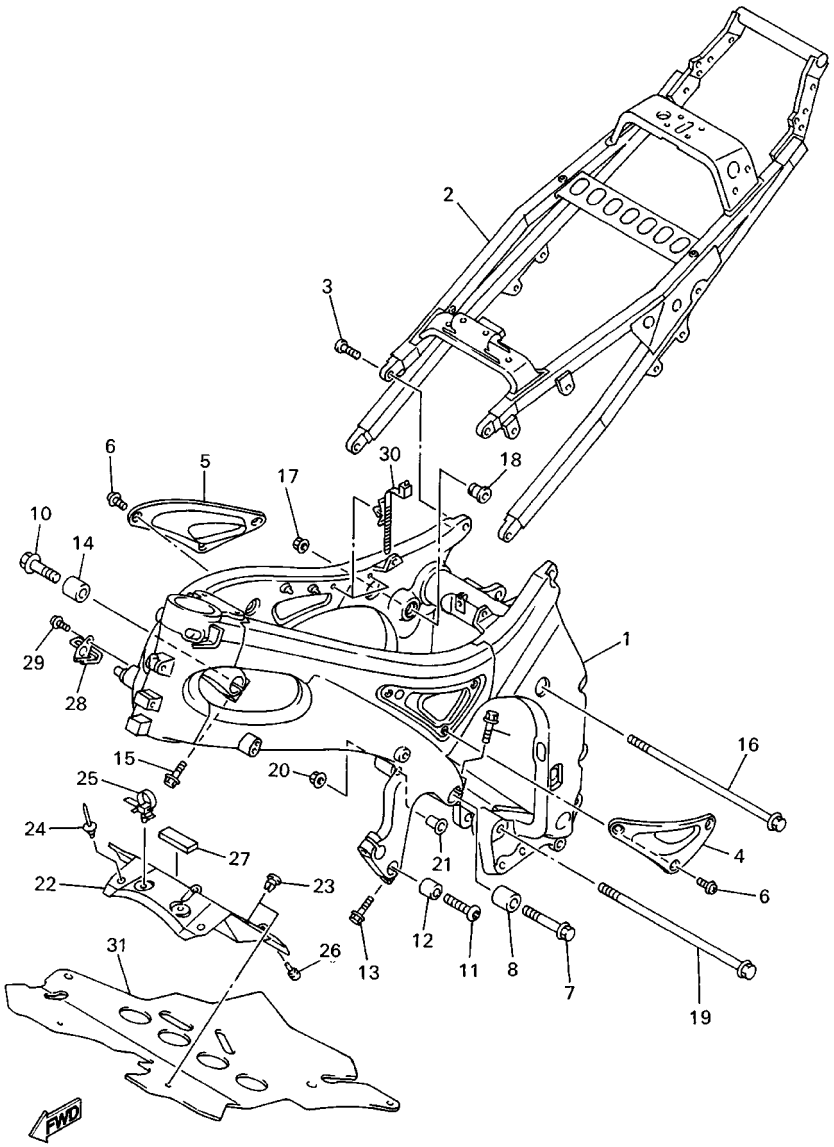

5EB3351-9190

FIG. 19 FRAME

REF. NO.	PART NO.	DESCRIPTION	5EB1	5EB2	5EB4			REMARKS
1	5EB–21110–00	FRAME COMP.	1	1	1			
2	5EB–21190–00	REAR FRAME COMP.	1	1	1			
3	90111–10018	BOLT	4	4	4			
4	5EB–2117V–00	COVER 7	1	1	1			
5	5EB–2117W–00	COVER 8	1	1	1			
6	90154–05059	SCREW, BINDING	6	6	6			
7	95027–12060	BOLT, FLANGE	1	1	1			
8	90387–1414W	COLLAR	1	1	1			
9	95027–08035	BOLT, FLANGE	1	1	1			
10	90105–12004	BOLT, WASHER BASED	1	1	1			
11	92017–10040	BOLT, BUTTON HEAD	2	2	2			
12	90387–1214V	COLLAR	2	2	2			
13	95027–06030	BOLT, FLANGE	2	2	2			
14	90387–1312P	COLLAR	1	1	1			
15	95027–08035	BOLT, FLANGE	1	1	1			
16	90105–10042	BOLT, WASHER BASED	1	1	1			
17	90179–10696	NUT	1	1	1			
18	5EB–21495–00	BOLT, ENGINE ADJUSTING	1	1	1			
19	90105–106A2	BOLT, WASHER BASED	1	1	1			
20	90179–10696	NUT	1	1	1			
21	5EB–21495–00	BOLT, ENGINE ADJUSTING	1	1	1			
22	5EB–2117M–00	COVER 2	1	1	1			
23	90269–07076	RIVET	3	3	3			
24	90269–07077	RIVET	2	2	2			
25	90464–12036	CLAMP	2	2	2			
26	36Y–21639–00	DAMPER 2	2	2	2			
27	3KJ–15337–00	DAMPER 4	1	1	1			

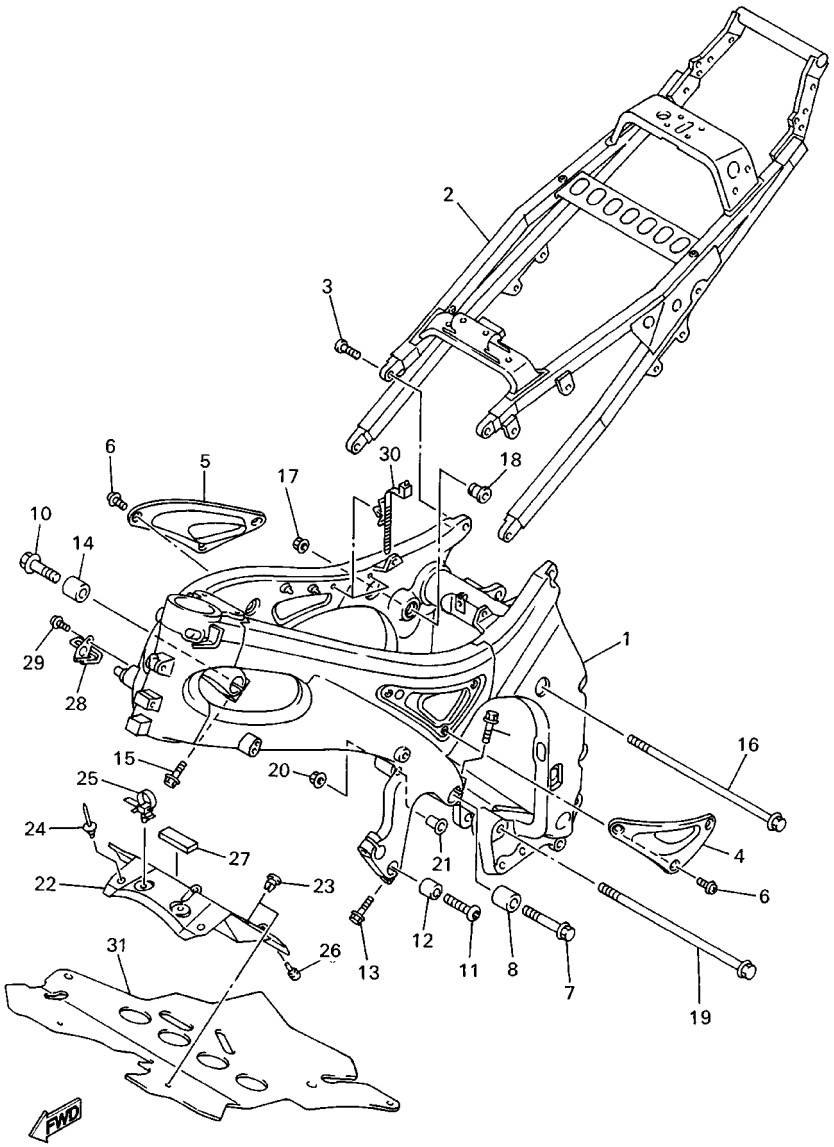

5EB3351-9190

FIG. 19 FRAME

REF. NO.	PART NO.	DESCRIPTION	5EB1	5EB2	5EB4			REMARKS
28	5EB–26132–00	GUIDE, CABLE 2	1	1	1			
29	98507–06012	SCREW, PAN HEAD	1	1	1			
30	90464–20213	CLAMP	2	2	2			
31	5EB–12682–00	PROTECTOR, HEAT	1	1	1			

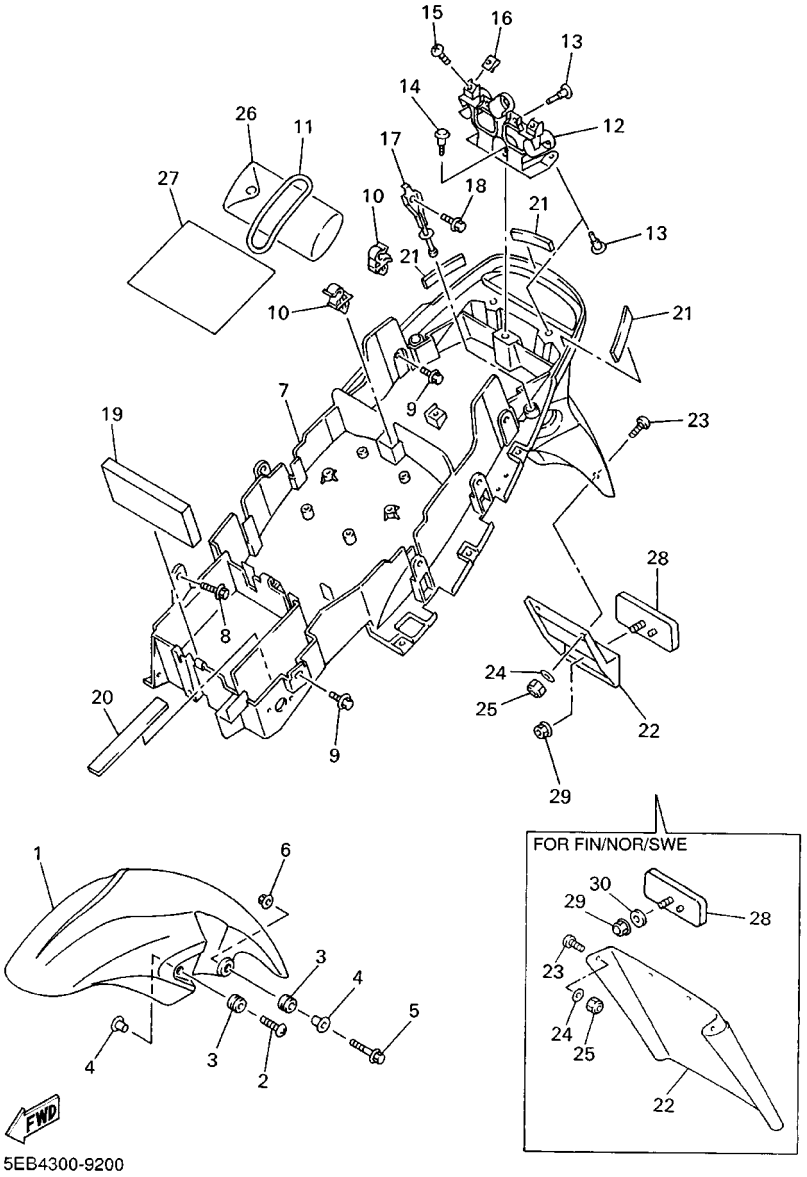

FIG. 20 FENDER

REF. NO.	PART NO.	DESCRIPTION	5EB1	5EB2	5EB4			REMARKS
1	5EB–21511–00–P0	FENDER, FRONT	1	1	1			UR VRC1 FOR BWC1
	5EB–21511–00–P1	FENDER, FRONT	1	1	1			UR DPBMC
	5EB–21511–00–4B	FENDER, FRONT	1	1				UR BL2 FOR SM1
2	90154–06061	SCREW, BINDING	2	2	2			
3	90480–12072	GROMMET	4	4	4			
4	90387–065J6	COLLAR	4	4	4			
5	95024–06030	BOLT, FLANGE	2	2	2			
6	95707–06500	NUT, FLANGE	2	2	2			
7	5EB–21611–00	FENDER, REAR	1	1				UR
	5EB–21611–10	FENDER, REAR	1	1	1			UR FOR FIN,NOR,SWE
8	90119–06227	BOLT, WITH WASHER	1	1	1			
9	90119–06007	BOLT, WITH WASHER	3	3	3			
10	90464–07259	CLAMP	2	2	2			
11	4XV–21376–00	BAND, TOOL	1	1	1			
12	5EB–2117E–00	BRACKET, TAILLIGHT	1	1	1			
13	90269–07077	RIVET	4	4	4			
14	90338–08220	PLUG	1	1	1			
15	90154–05059	SCREW, BINDING	2	2	2			
16	90183–05061	NUT, SPRING	2	2	2			
17	5EB–21654–00	WIRE	2	2	2			
18	90105–063A3	BOLT, WASHER BASED	2	2	2			
19	4XV–21639–00	DAMPER 2	1	1	1			
20	1AE–2834E–00	DAMPER	2	2	2			
21	1LJ–2414J–00	DAMPER, PLATE 2	3	3	3			
22	4XV–85132–00	BRACKET, REFLECTOR 1	1	1				UR
	5EB–21621–00	FLAP	1	1	1			UR FOR FIN,NOR,SWE
23	90149–04278	SCREW	2	2				UR

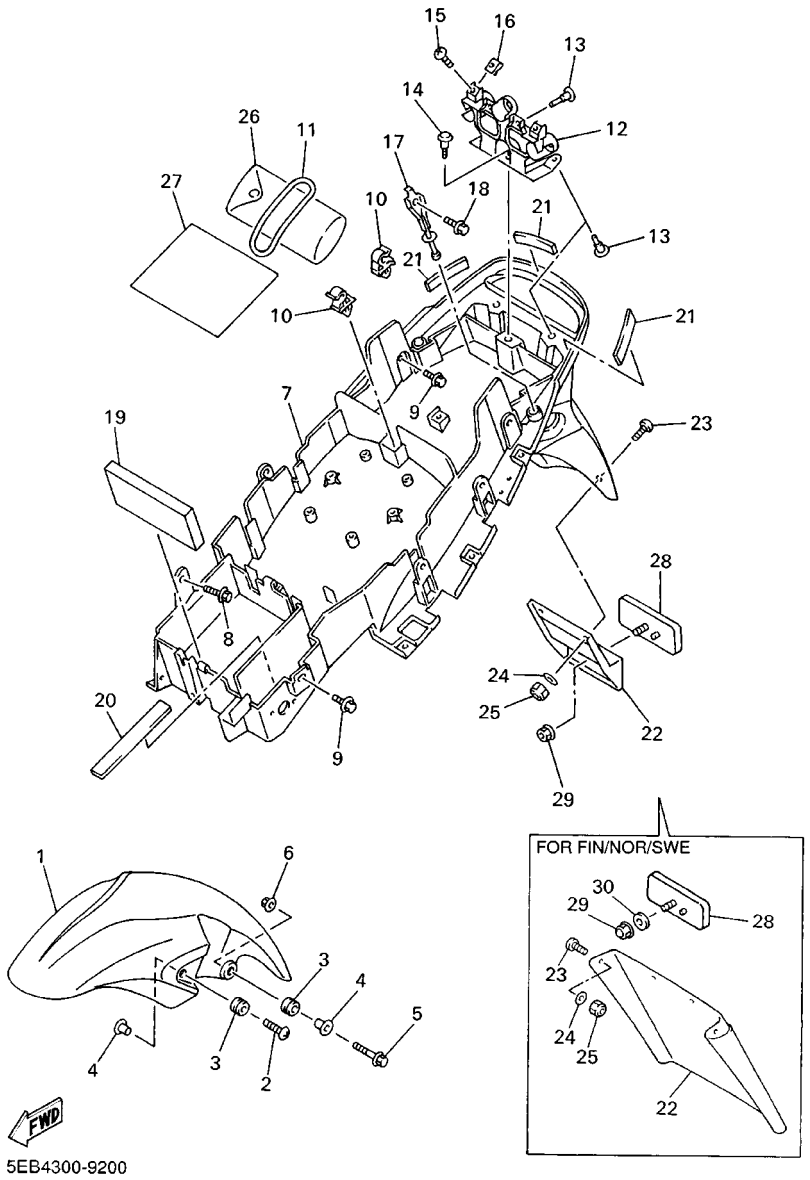

FIG. 20 FENDER

REF. NO.	PART NO.	DESCRIPTION	5EB1	5EB2	5EB4			REMARKS
23	90149–04278	SCREW	4	4	4			UR FOR FIN,NOR,SWE
24	90201–04018	WASHER, PLATE	2	2				UR
	90201–04018	WASHER, PLATE	4	4	4			UR FOR FIN,NOR,SWE
25	95607–04100	NUT, U	2	2				UR
	95607–04100	NUT, U	4	4	4			UR FOR FIN,NOR,SWE
26	5EB–28100–00	TOOL KIT	1	1	1			
27	5EB–14733–00	MAT 1	1	1	1			
28	3Y6–85130–02	REAR REFLECTOR ASSY	1	1	1			
29	95707–05500	NUT, FLANGE	1	1				UR
	90176–05054	NUT, CROWN	1	1	1			UR FOR FIN,NOR,SWE
30	90202–05188	WASHER, PLATE	1	1	1			FOR FIN,NOR,SWE

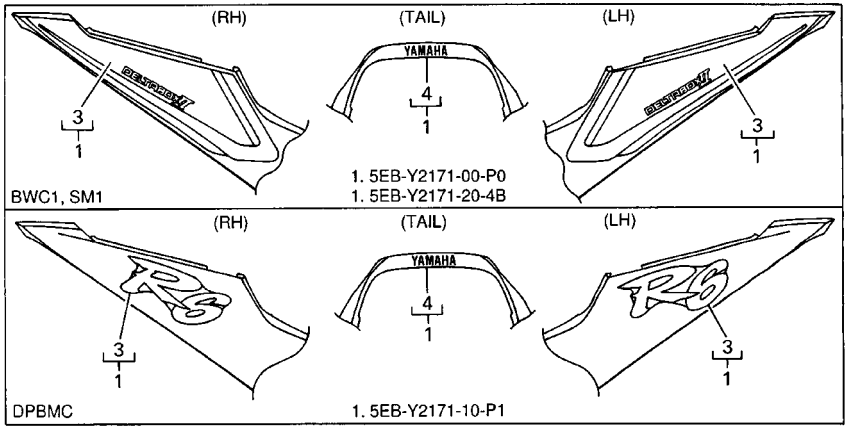

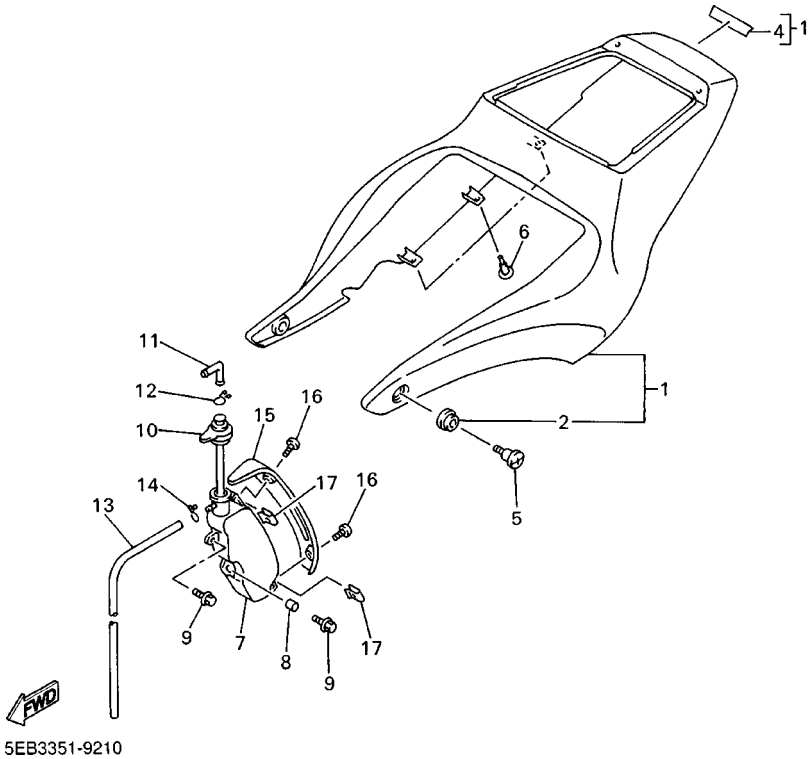

FIG. 21 SIDE COVER

REF. NO.	PART NO.	DESCRIPTION	5EB1	5EB2	5EB4			REMARKS
1	5EB–Y2171–00–P0	COVER, SIDE 1	1	1	1			UR BWC1
	5EB–Y2171–10–P1	COVER, SIDE 1	1	1	1			UR DPBMC
	5EB–Y2171–20–4B	COVER, SIDE 1	1	1				UR BL2 FOR SM1
2	90480–13398	.GROMMET	2	2	2			
3	5EB–2173L–00	.GRAPHIC SET 1	1	1	1			UR FOR BWC1
	5EB–21781–00	.EMBLEM 1	2	2	2			UR FOR DPBMC
	5EB–2173L–10	.GRAPHIC SET 1	1	1				UR FOR SM1
4	99234–00080	.EMBLEM, YAMAHA	1	1	1			UR FOR BWC1
	99231–00080	.EMBLEM, YAMAHA	1	1	1			UR FOR DPBMC
	99236–00080	.EMBLEM, YAMAHA	1	1				UR FOR SM1
5	90150–06036	SCREW, ROUND HEAD	2	2	2			
6	90269–07077	RIVET	6	6	6			
7	5EB–21871–00	TANK, RECOVERY	1	1	1			
8	90387–066K1	COLLAR	1	1	1			
9	90119–06117	BOLT, WITH WASHER	2	2	2			
10	5EB–21875–00	CAP	1	1	1			
11	26H–21828–00	ELBOW	1	1	1			
12	90467–11019	CLIP	1	1	1			
13	90445–08605	HOSE	1	1	1			
14	90467–08003	CLIP	1	1	1			
15	5EB–2172W–00	COVER	1	1	1			
16	90150–05039	SCREW, ROUND HEAD	2	2	2			
17	90183–05061	NUT, SPRING	2	2	2			

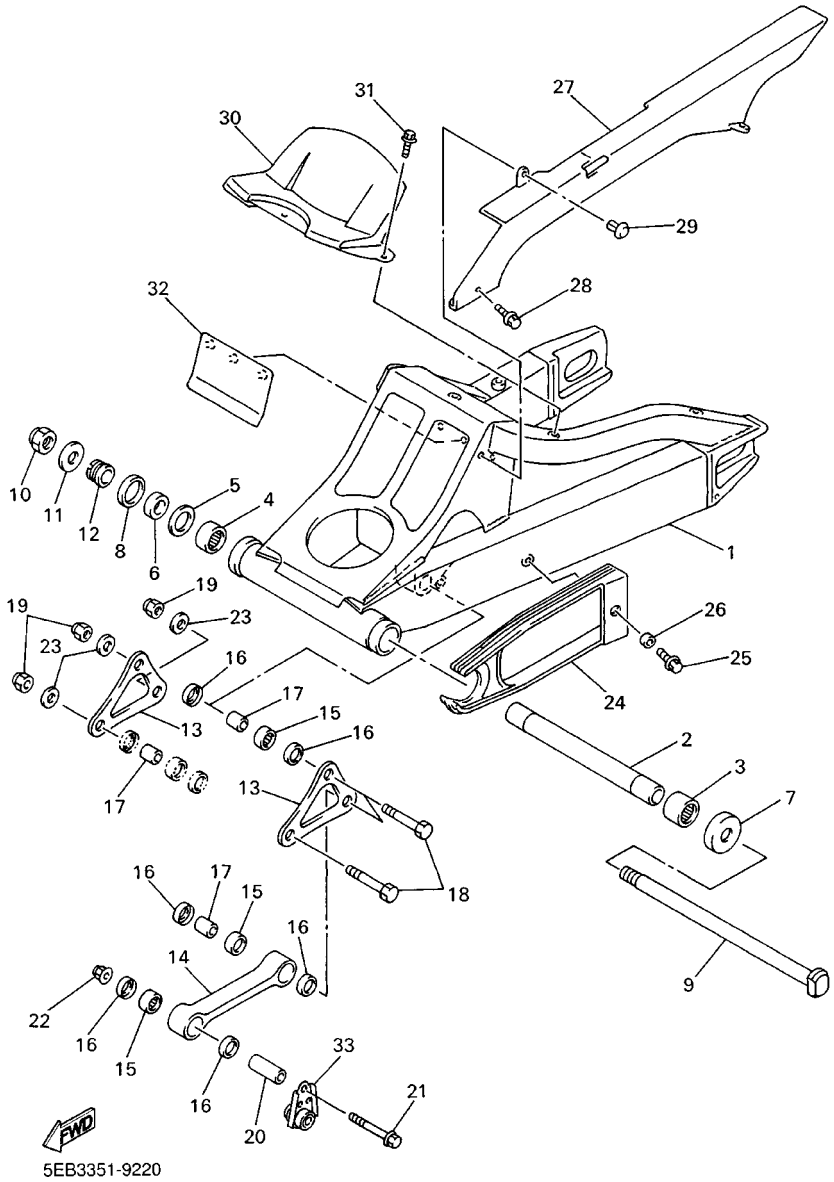

FIG. 22 REAR ARM

REF. NO.	PART NO.	DESCRIPTION	5EB1	5EB2	5EB4			REMARKS
1	5EB–22110–00	REAR ARM COMP.	1	1	1			
2	5EB–22184–00	BUSH	1	1	1			
3	93315–42523	BEARING	1	1	1			
4	93315–42536	BEARING	1	1	1			
5	5EB–22127–00	SHIM	1	1	1			
6	5EB–22123–00	BUSH 1	1	1	1			
7	3FV–22128–00	COVER, THRUST 1	1	1	1			
8	93109–33049	OIL SEAL	1	1	1			
9	4FN–22141–00	SHAFT, PIVOT	1	1	1			
10	90185–18104	NUT, SELF–LOCKING	1	1	1			
11	90201–186M4	WASHER, PLATE	1	1	1			
12	5EB–22125–00	BOLT	1	1	1			
13	5EB–2217A–00	ARM, RELAY	2	2	2			
14	5EB–2217M–00	ARM 1	1	1	1			
15	93315–31759	BEARING	3	3	3			
16	93109–17071	OIL SEAL	6	6	6			
17	90387–127W0	COLLAR	3	3	3			
18	90101–10709	BOLT	3	3	3			
19	95617–10100	NUT, U	3	3	3			
20	90387–1012B	COLLAR	1	1	1			
21	90105–10323	BOLT, WASHER BASED	1	1	1			
22	95607–10200	NUT, SELF–LOCKING	1	1	1			
23	90201–101J1	WASHER, PLATE	3	3	3			
24	5EB–22151–00	SEAL, GUARD	1	1	1			
25	90119–06227	BOLT, WITH WASHER	1	1	1			
26	90387–06372	COLLAR	1	1	1			
27	5EB–22311–00	CASE, CHAIN	1	1	1			

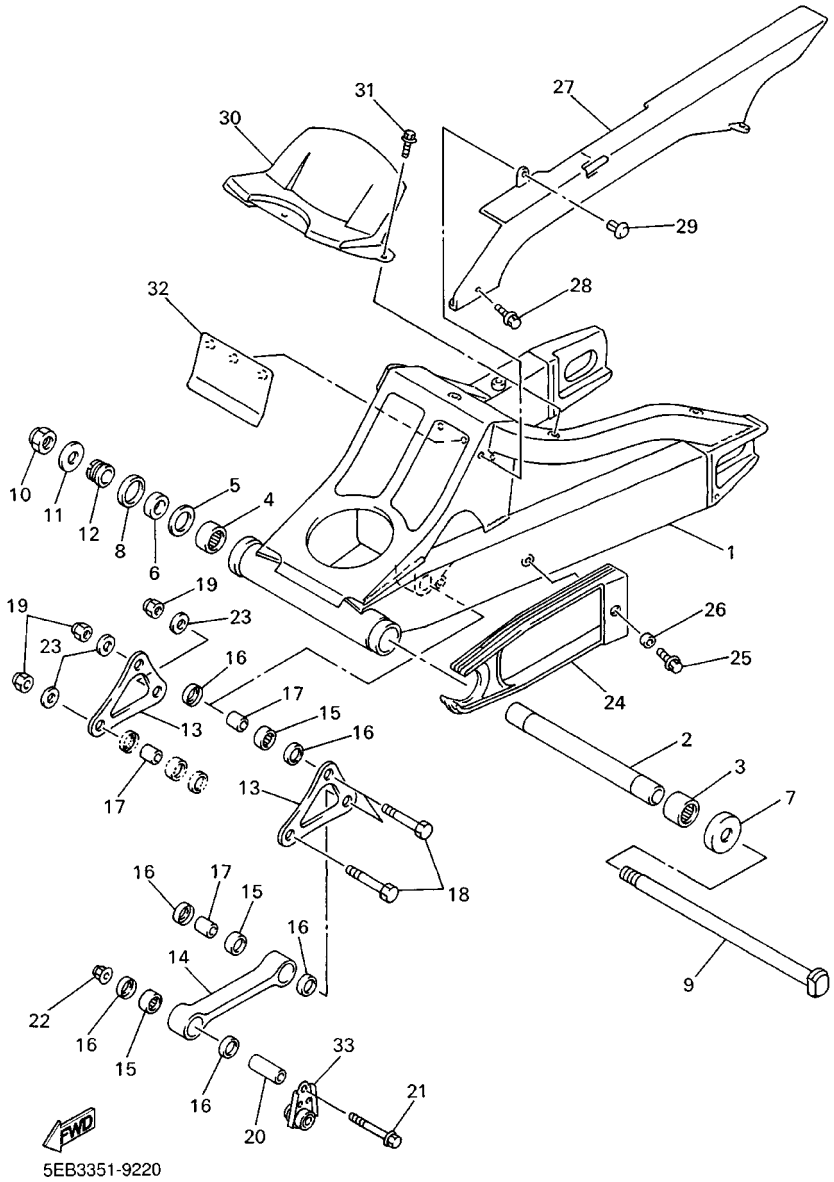

FIG. 22 REAR ARM

REF. NO.	PART NO.	DESCRIPTION	5EB1	5EB2	5EB4			REMARKS
28	90119–06052	BOLT, WITH WASHER	2	2	2			
29	90269–07076	RIVET	1	1	1			
30	5EB–21650–00	REAR FENDER COMP.	1	1	1			
31	90119–06052	BOLT, WITH WASHER	3	3	3			
32	30X–21621–00	FLAP	1	1	1			
33	5EB–21446–00	STAY, MUFFLER 2	1	1	1			

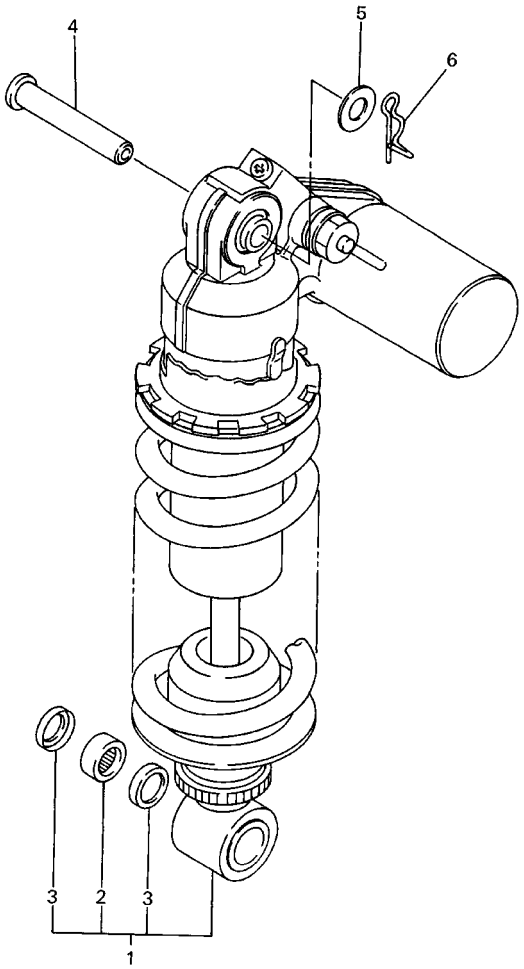

5EB3351-9230

FIG. 23 REAR SUSPENSION

REF. NO.	PART NO.	DESCRIPTION	5EB1	5EB2	5EB4			REMARKS
1	5EB–22210–00	SHOCK ABSORBER ASSY, REAR	1	1	1			
2	93315–31759	.BEARING	1	1	1			
3	93109–17071	.OIL SEAL	2	2	2			
4	90240–10143	PIN, CLEVIS	1	1	1			
5	90201–08759	WASHER, PLATE	1	1	1			
6	90468–20196	CLIP	1	1	1			

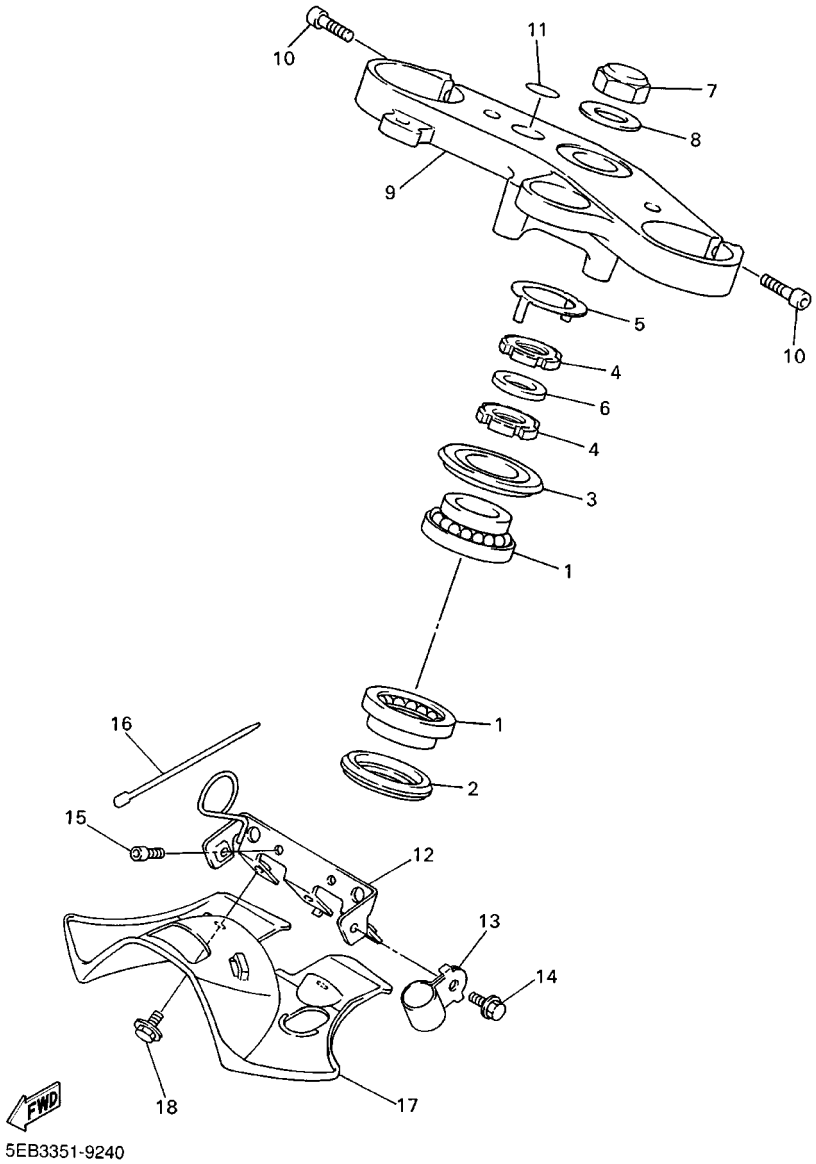

FIG. 24 STEERING

REF. NO.	PART NO.	DESCRIPTION	5EB1	5EB2	5EB4			REMARKS
1	93399–99932	BEARING	2	2	2			
2	3FV–23462–00	SEAL, STEERING	1	1	1			
3	4XV–23415–00	COVER, BALL RACE 1	1	1	1			
4	90179–30691	NUT	2	2	2			
5	4XV–23418–00	WASHER, SPECIAL	1	1	1			
6	90202–30235	WASHER, PLATE	1	1	1			
7	90176–28083	NUT, CROWN	1	1	1			
8	90201–281U8	WASHER, PLATE	1	1	1			
9	5EB–23435–01	CROWN, HANDLE	1	1	1			
10	91314–08030	BOLT	2	2	2			
11	4XV–2341B–00	EMBLEM	1	1	1			
12	5EB–23377–00	BRACKET, HORN	1	1	1			
13	90461–10132	CLAMP	2	2	2			
14	95807–06012	BOLT, FLANGE	2	2	2			
*15	91317–06012	BOLT	2	2	2			
16	3MA–82591–00	BAND	1	1	1			
17	5EB–23818–00	COVER, STEERING	1	1	1			
18	90119–06117	BOLT, WITH WASHER	2	2	2			

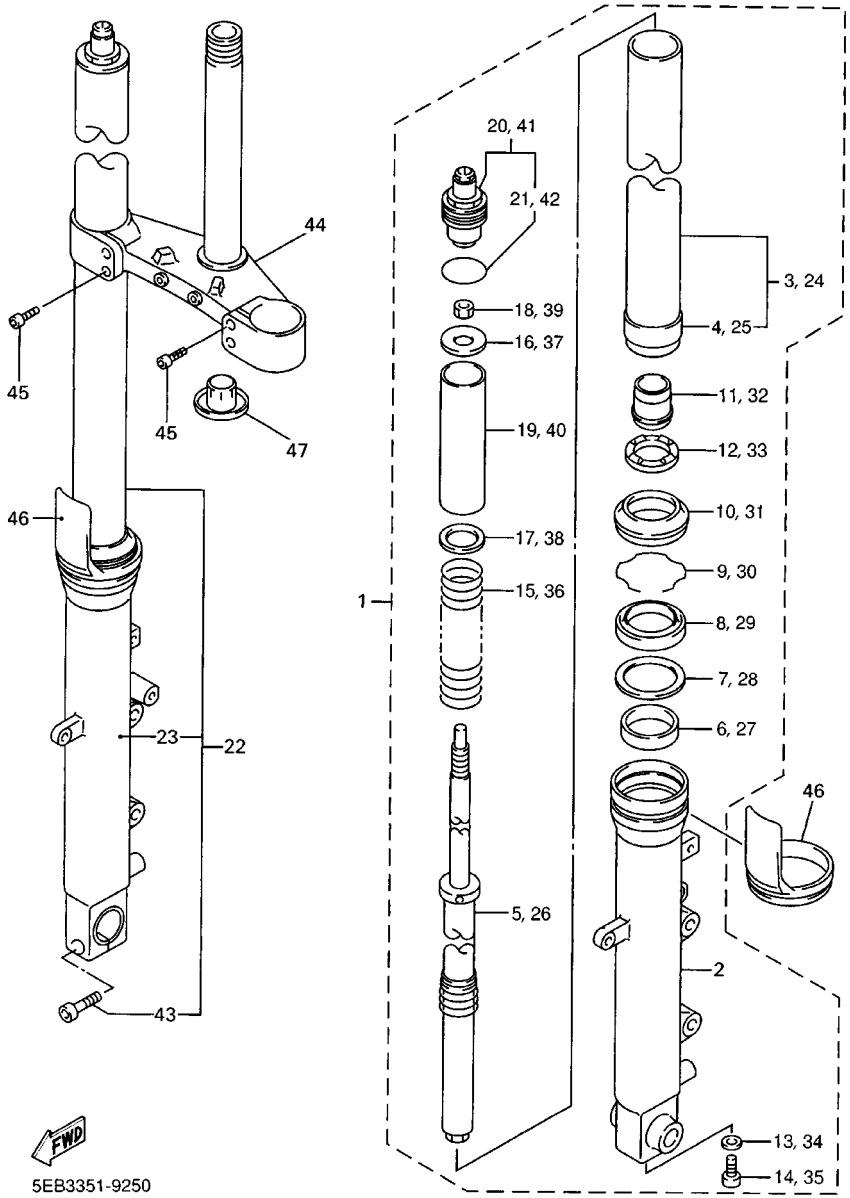

FIG. 25 FRONT FORK

REF. NO.	PART NO.	DESCRIPTION	5EB1	5EB2	5EB4			REMARKS
1	5EB–23102–00	FRONT FORK ASSY (L.H)	1	1	1			
2	5EB–23126–00	.TUBE, OUTER (LEFT)	1	1	1			
3	5EB–23110–00	.INNER TUBE COMP.1	1	1	1			
4	5EB–23171–00	..PISTON, FRONT FORK	1	1	1			
5	5EB–23170–00	.CYLINDER COMP., FRONT FORK	1	1	1			
6	5EB–23125–00	.METAL, SLIDE 1	1	1	1			
7	4V4–23146–L0	.WASHER, OIL SEAL	1	1	1			
8	4PU–23145–00	.OIL SEAL	1	1	1			
9	4V4–23153–L0	.RING, SNAP	1	1	1			
10	4PU–23144–00	.SEAL, DUST	1	1	1			
11	5EB–23173–00	.SPINDLE, TAPER	1	1	1			
12	5EB–2332K–00	.BUMP, STOP	1	1	1			
13	2K8–23158–L0	.GASKET	1	1	1			
14	3LC–23181–00	.BOLT, HEXAGON SOCKET HEAD	1	1	1			
15	5EB–23141–00	.SPRING, FRONT FORK	1	1	1			
16	3TJ–23149–10	.WASHER, SPRING UPPER	1	1	1			
17	3LR–23149–00	.WASHER, SPRING UPPER	1	1	1			
18	3LC–23357–00	.NUT	1	1	1			
19	4GY–23118–10	.SPACER	1	1	1			
20	4KG–23111–10	.BOLT, CAP	1	1	1			
21	4V4–23188–L0	..O–RING	1	1	1			
22	5EB–23103–00	FRONT FORK ASSY (R.H)	1	1	1			
23	5EB–23136–00	.TUBE, OUTER (RIGHT)	1	1	1			
24	5EB–23110–00	.INNER TUBE COMP.1	1	1	1			
25	5EB–23171–00	..PISTON, FRONT FORK	1	1	1			
26	5EB–23170–00	.CYLINDER COMP., FRONT FORK	1	1	1			
27	5EB–23125–00	.METAL, SLIDE 1	1	1	1			

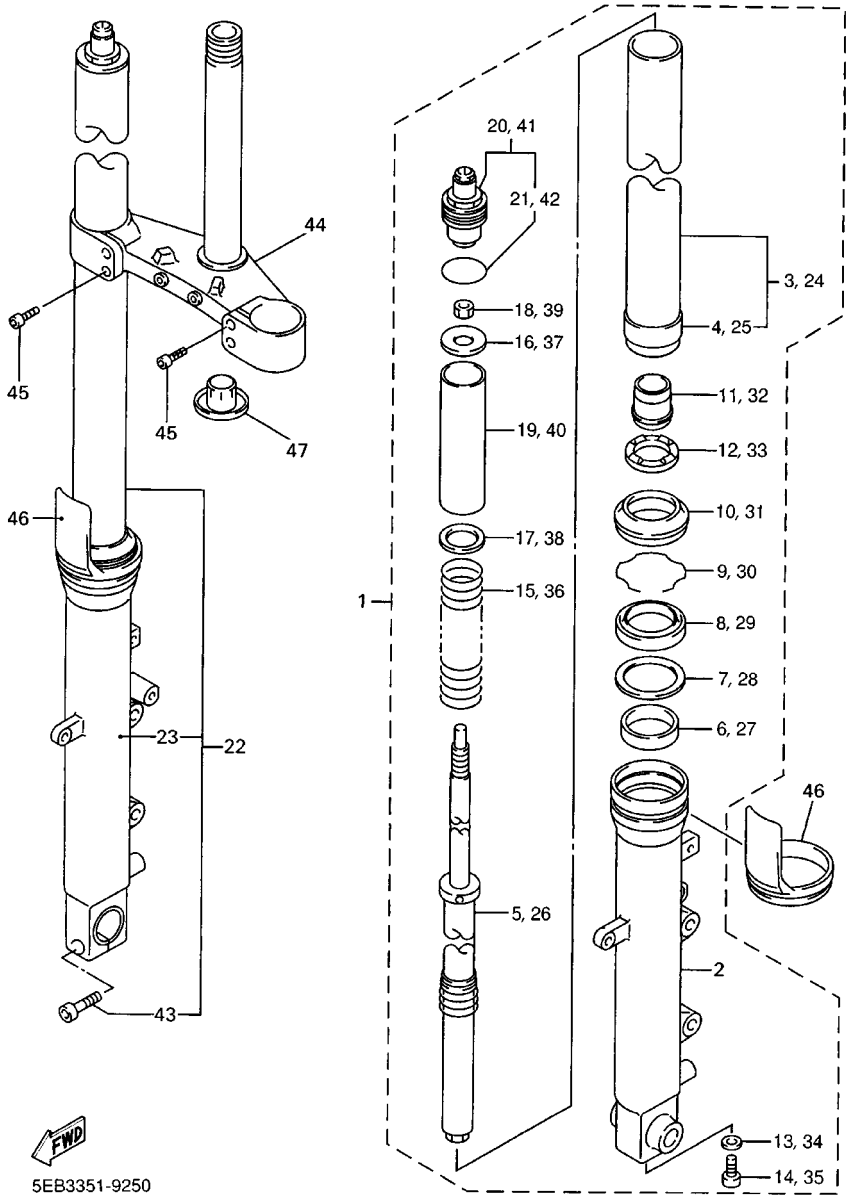

FIG. 25 FRONT FORK

REF. NO.	PART NO.	DESCRIPTION	5EB1	5EB2	5EB4			REMARKS
28	4V4–23146–L0	.WASHER, OIL SEAL	1	1	1			
29	4PU–23145–00	.OIL SEAL	1	1	1			
30	4V4–23153–L0	.RING, SNAP	1	1	1			
31	4PU–23144–00	.SEAL, DUST	1	1	1			
32	5EB–23173–00	.SPINDLE, TAPER	1	1	1			
33	5EB–2332K–00	.BUMP, STOP	1	1	1			
34	2K8–23158–L0	.GASKET	1	1	1			
35	3LC–23181–00	.BOLT, HEXAGON SOCKET HEAD	1	1	1			
36	5EB–23141–00	.SPRING, FRONT FORK	1	1	1			
37	3TJ–23149–10	.WASHER, SPRING UPPER	1	1	1			
38	3LR–23149–00	.WASHER, SPRING UPPER	1	1	1			
39	3LC–23357–00	.NUT	1	1	1			
40	4GY–23118–10	.SPACER	1	1	1			
41	4KG–23111–10	.BOLT, CAP	1	1	1			
42	4V4–23188–L0	..O–RING	1	1	1			
43	91314–08035	.BOLT	1	1	1			
44	5EB–23340–00	UNDER BRACKET COMP.	1	1	1			
45	91314–08025	BOLT	4	4	4			
46	4PU–2331G–00	COVER	2	2	2			
47	4KM–23123–01	COVER, LOWER 1	1	1	1			

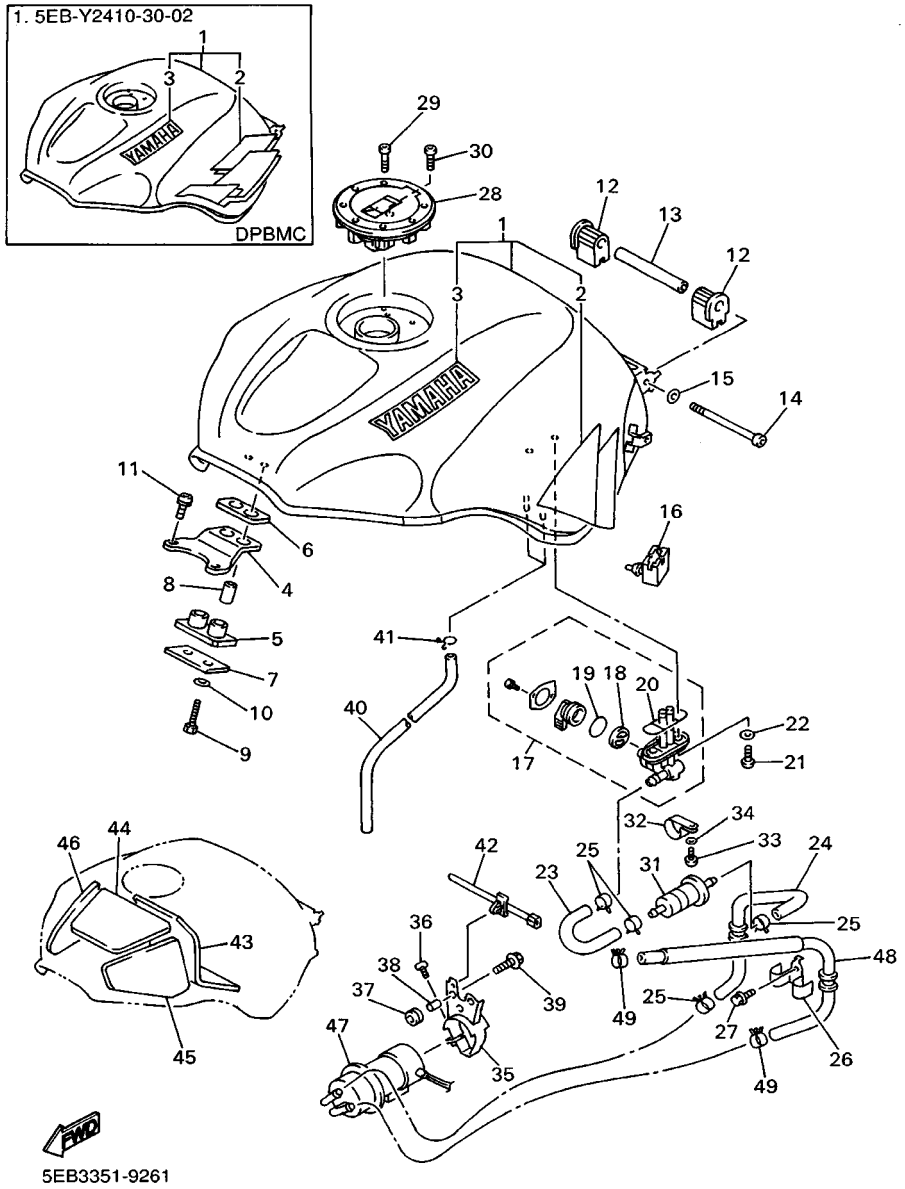

FIG. 26 FUEL TANK

REF. NO.	PART NO.	DESCRIPTION	5EB1	5EB2	5EB4			REMARKS
1	5EB–Y2410–30–01	FUEL TANK COMP.	1	1	1			UR BWC1/VRC1
	5EB–Y2410–30–02	FUEL TANK COMP.	1	1	1			UR DPBMC
	5EB–Y2410–30–03	FUEL TANK COMP.	1	1				UR SM1
2	5EB–24240–00	.GRAPHIC SET	1	1	1			UR FOR BWC1
	5EB–24250–00	.GRAPHIC SET	1	1	1			UR FOR DPBMC
	5EB–24240–10	.GRAPHIC SET	1	1				UR FOR SM1
3	4TV–2153A–20	.EMBLEM, YAMAHA	2	2	2			UR FOR BWC1
	4TV–2153A–00	.EMBLEM, YAMAHA	2	2	2			UR FOR DPBMC
	4TV–2153A–10	.EMBLEM, YAMAHA	2	2				UR FOR SM1
4	5EB–24191–00	BRACKET, FUEL TANK 1	1	1	1			
5	5EB–24181–00	DAMPER, LOCATING 1	1	1	1			
6	2GH–24183–00	DAMPER, LOCATING 3	1	1	1			
7	2GH–24186–00	WASHER, SPECIAL	1	1	1			
8	90387–06027	COLLAR	2	2	2			
9	97007–06030	BOLT	2	2	2			
10	92907–06600	WASHER, PLATE	2	2	2			
*11	90159–06005	SCREW, WITH WASHER	2	2	2			
12	5EB–24183–00	DAMPER, LOCATING 3	2	2	2			
13	90387–061W6	COLLAR	1	1	1			
14	91317–06090	BOLT	1	1	1			
15	90201–06050	WASHER, PLATE	1	1	1			
16	5EB–24182–00	DAMPER, LOCATING 2	2	2	2			
17	4TV–24500–00	FUEL COCK ASSY 1	1	1	1			
18	3XV–24523–00	.VALVE	1	1	1			
19	3XV–24534–00	.SEAL, COCK	1	1	1			
20	4X8–24512–00	.O–RING	1	1	1			
21	90149–06008	SCREW	2	2	2			

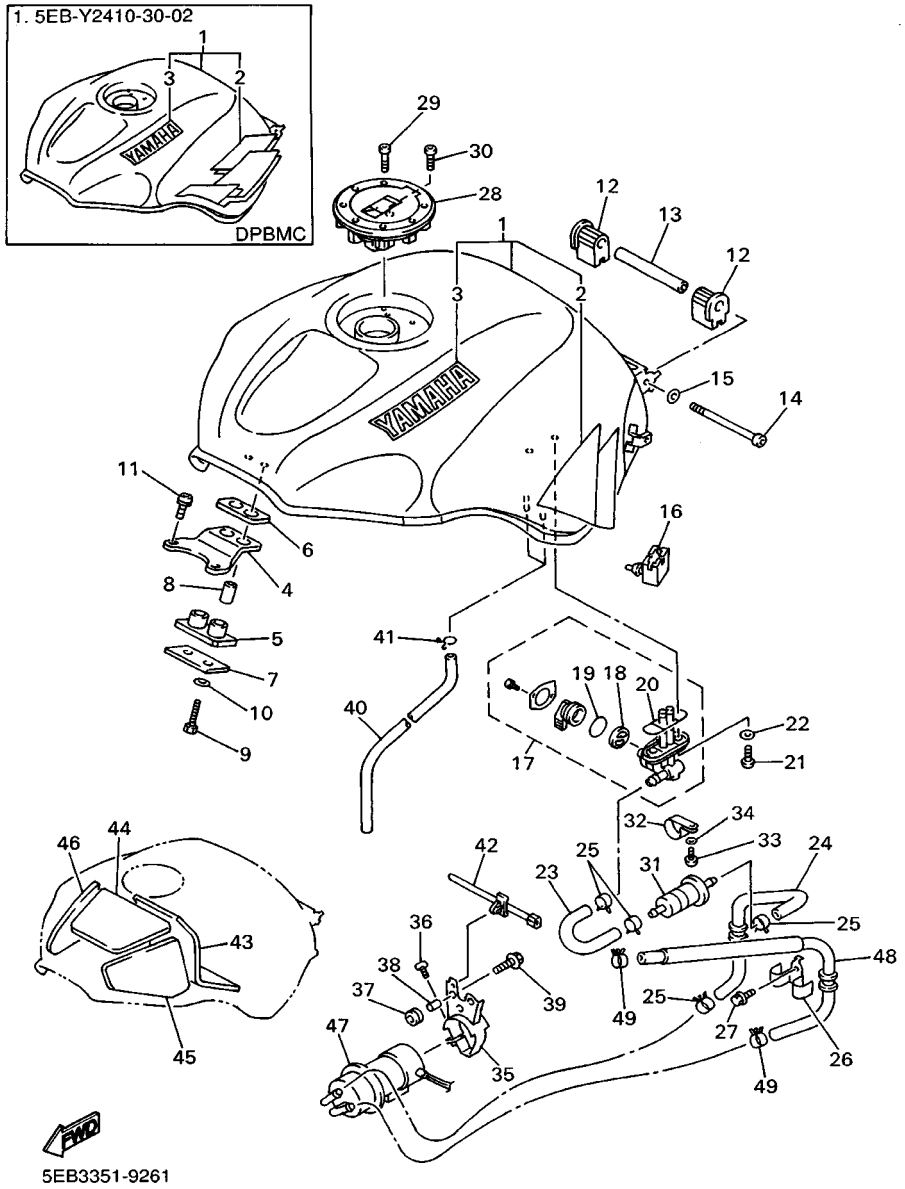

FIG. 26 FUEL TANK

REF. NO.	PART NO.	DESCRIPTION	5EB1	5EB2	5EB4			REMARKS
22	90202–05193	WASHER, PLATE	2	2	2			
23	5EB–24311–00	PIPE, FUEL 1	1	1	1			
24	5EB–24312–00	PIPE 2	1	1	1			
25	90467–14057	CLIP	4	4	4			
26	5EB–2417H–00	CLAMP 1	1	1	1			
27	95027–06012	BOLT, FLANGE	1	1	1			
28	4HM–24602–00	CAP ASSY	1	1	1			
29	90110–05112	BOLT, HEXAGON SOCKET HEAD	3	3	3			
30	91317–05010	BOLT	1	1	1			
31	4TV–24560–00	FILTER ASSY	1	1	1			
32	1AE–24366–00	CLAMP, FUEL PIPE 1	1	1	1			
33	98507–06012	SCREW, PAN HEAD	1	1	1			
34	92907–06600	WASHER, PLATE	1	1	1			
35	5EB–24491–00	BRACKET, FUEL PUMP	1	1	1			
36	98507–05010	SCREW, PAN HEAD	1	1	1			
37	90480–13163	GROMMET	2	2	2			
38	90387–060G7	COLLAR	2	2	2			
39	90119–06096	BOLT, WITH WASHER	2	2	2			
40	90445–102G9	HOSE	2	2	2			
41	90467–10008	CLIP	2	2	2			
42	90464–12089	CLAMP	1	1	1			
43	5EB–2414K–00	DAMPER, PLATE 3	1	1	1			
44	5EB–2414H–00	DAMPER, PLATE 1	1	1	1			
45	5EB–2411J–00	DAMPER, SIDE COVER	1	1	1			
46	5EB–2414J–00	DAMPER, PLATE 2	1	1	1			
47	5EB–13907–00	FUEL PUMP COMP.	1	1	1			
48	5EB–14294–00	HOSE	1	1	1			

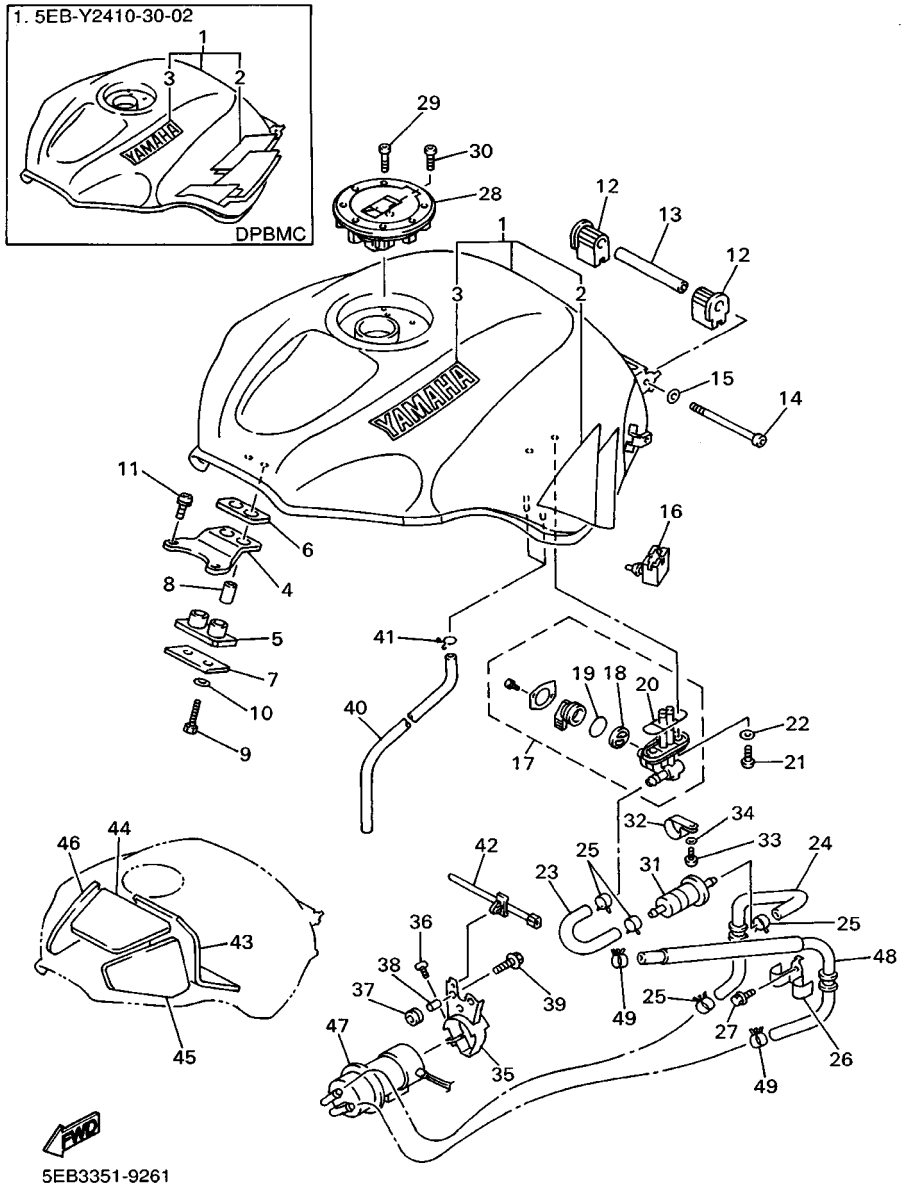

FIG. 26 FUEL TANK

REF. NO.	PART NO.	DESCRIPTION	5EB1	5EB2	5EB4			REMARKS
49	90467–11044	CLIP	2	2	2			

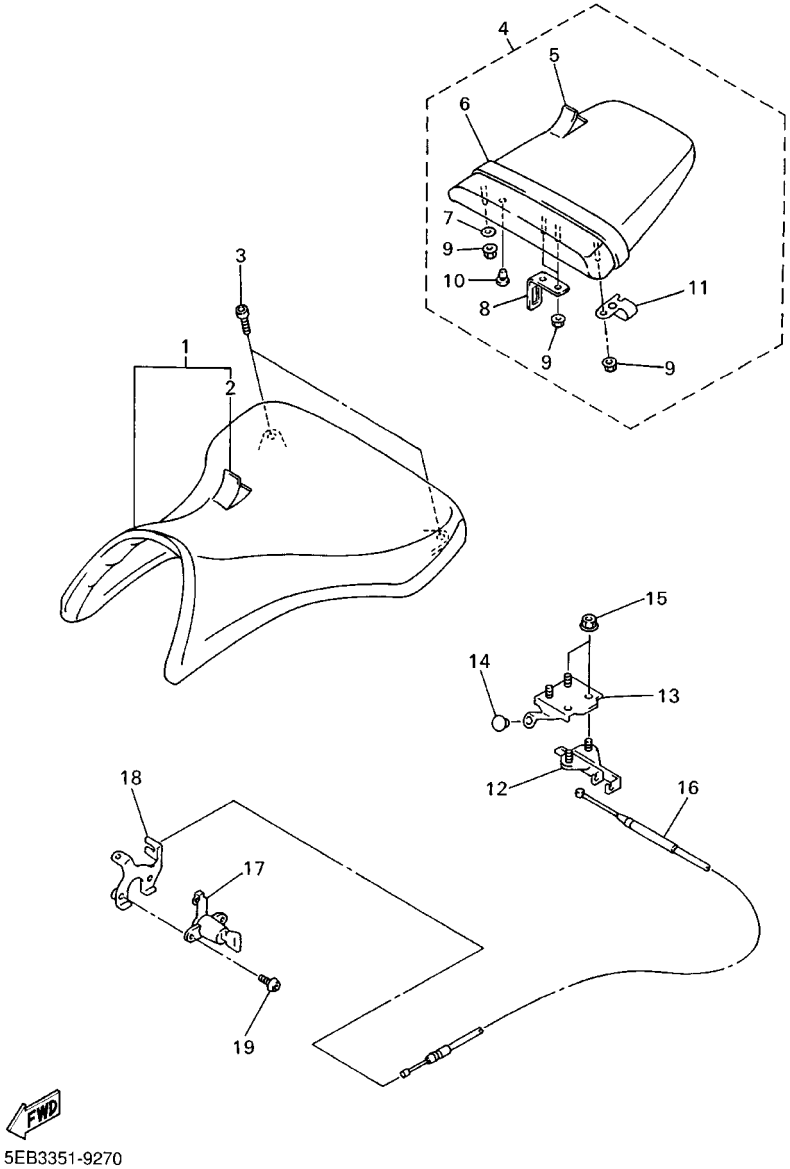

FIG. 27 SEAT

REF. NO.	PART NO.	DESCRIPTION	5EB1	5EB2	5EB4			REMARKS
1	5EB–24710–00	SINGLE SEAT ASSY	1	1	1			
2	5EB–2470F–00	.COVER, SEAT	1	1	1			
3	90110–06258	BOLT, HEXAGON SOCKET HEAD	2	2	2			
4	5EB–24750–00	TANDEM SEAT ASSY	1	1	1			
5	5EB–24751–00	.COVER, TANDEM SEAT	1	1	1			
6	5EB–24734–00	.BAND, SEAT	1	1	1			
7	90201–06008	.WASHER, PLATE	1	1	1			
8	4HM–24728–00	.BRACKET, SEAT	1	1	1			
9	90179–06635	.NUT	4	4	4			
10	90338–06018	.PLUG	2	2	2			
11	5EB–24728–00	.BRACKET, SEAT	1	1	1			
12	4BP–24780–00	SEAT LOCK ASSY	1	1	1			
13	4XV–24792–00	PLATE	1	1	1			
14	90338–07043	PLUG	1	1	1			
15	95707–06500	NUT, FLANGE	4	4	4			
16	5EB–2478E–00	CABLE, SEAT LOCK	1	1	1			
17	2TV–W2470–00	SEAT LOCK ASSY	1	1	1			
18	4XV–2117K–00	STAY, LOCK	1	1	1			
19	90149–06308	SCREW	2	2	2			

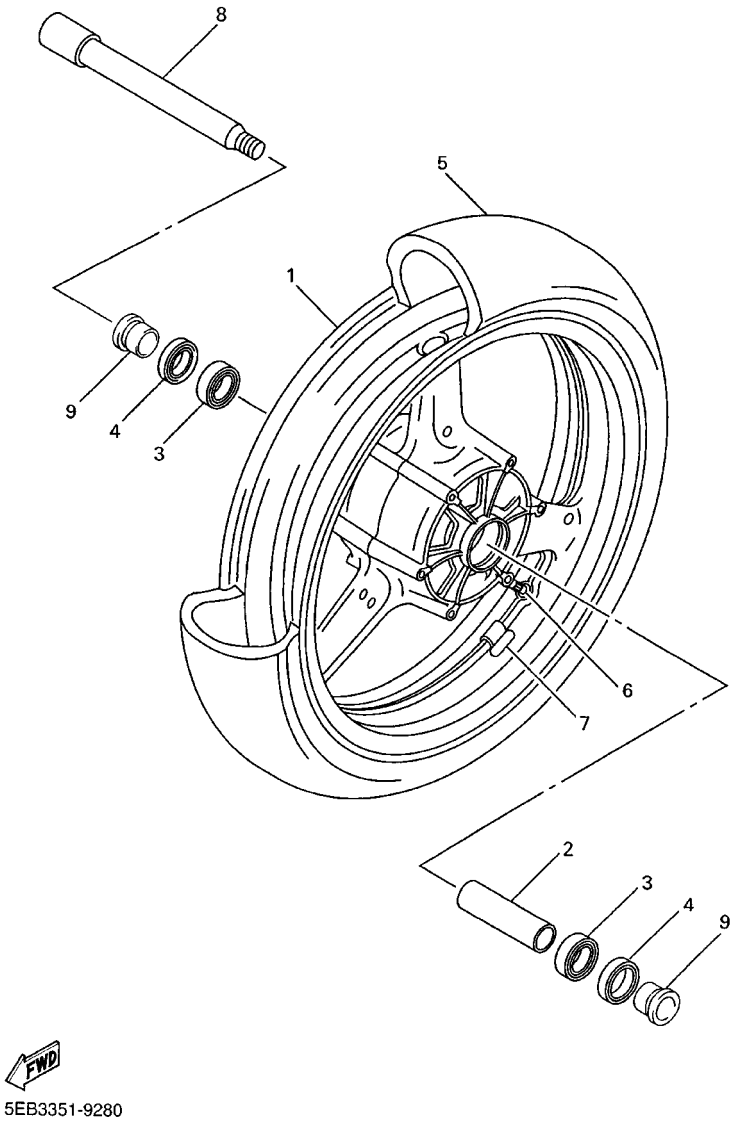

FIG. 28 FRONT WHEEL

REF. NO.	PART NO.	DESCRIPTION	5EB1	5EB2	5EB4			REMARKS
1	4XV–25168–00–33	CAST WHEEL, FRONT	1	1	1			UR YB FOR BWC1, SM1
	4XV–25168–00–35	CAST WHEEL, FRONT	1	1	1			UR SL FOR DPBMC
2	4XV–25117–00	SPACER, BEARING	1	1	1			
3	93306–00420	BEARING (B6004)	2	2	2			
4	93106–28043	OIL SEAL	2	2	2			
5	94112–1715S	TIRE (120/60ZR17 55W BATTLAX BT56F)	1	1				UR BRIDGESTONE
	94112–1715T	TIRE (120/60ZR17 D207FJ)	1		1			UR DUNLOP FOR GBR
6	93900–00030	VALVE, RIM	1	1	1			
7	29L–25398–00	BALANCER, WHEEL (10G)	1	1	1			UR
	29L–25398–10	BALANCER, WHEEL (20G)	1	1	1			UR
	29L–25398–20	BALANCER, WHEEL (30G)	1	1	1			UR
8	4XV–25181–00	AXLE, WHEEL	1	1	1			
9	90387–2200T	COLLAR	2	2	2			

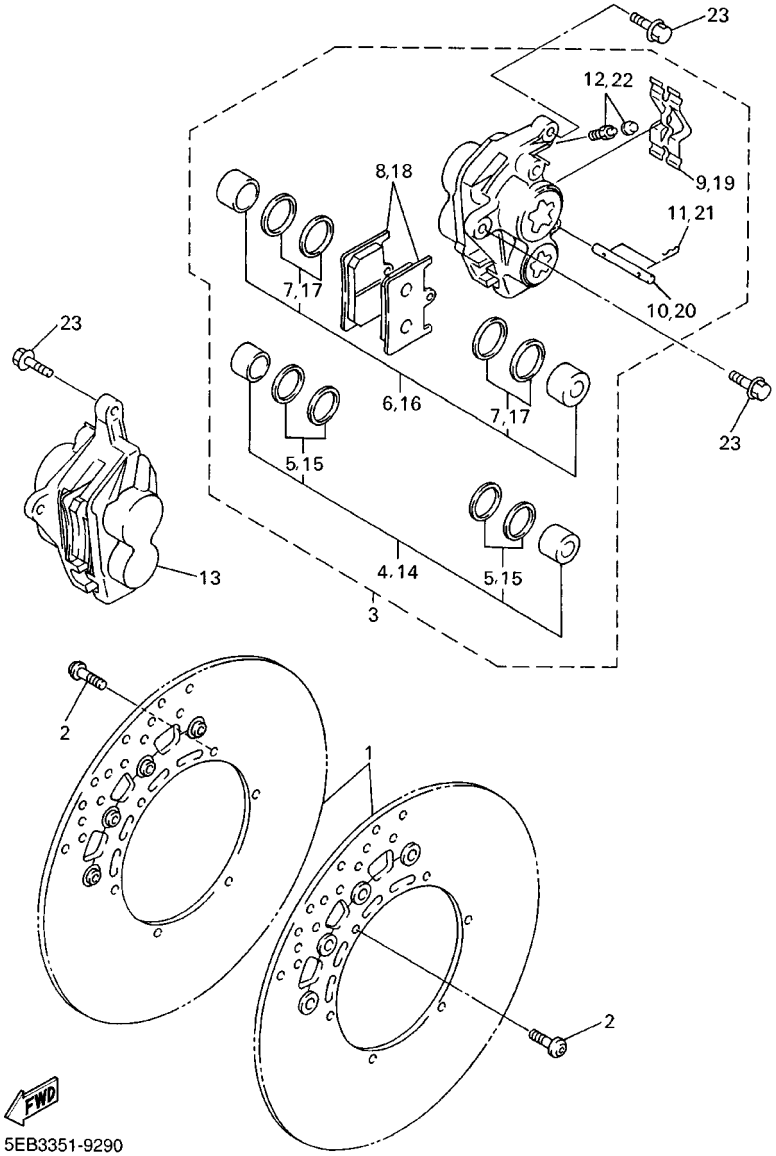

FIG. 29 FRONT BRAKE CALIPER

REF. NO.	PART NO.	DESCRIPTION	5EB1	5EB2	5EB4			REMARKS
1	4SV–2581T–00	DISC BRAKE ASSY	2	2	2			
2	90109–064G6	BOLT	12	12	12			
3	5DM–2580T–00	CALIPER ASSY (LEFT)	1	1	1			
4	4SV–W0057–00	.PISTON ASSY, CALIPER	1	1	1			
5	3MA–W0047–10	..CALIPER SEAL KIT	1	1	1			
6	4SV–W0057–10	.PISTON ASSY, CALIPER	1	1	1			
7	3GM–W0047–10	..CALIPER SEAL KIT	1	1	1			
8	4SV–W0045–00	.BRAKE PAD KIT	1	1	1			
9	4SV–25919–00	.SUPPORT, PAD	1	1	1			
10	4SV–25924–00	.PIN, PAD	1	1	1			
11	3GM–25925–00	.CLIP	2	2	2			
12	1J3–W0048–00	.BLEED SCREW KIT	1	1	1			
13	5DM–2580U–00	CALIPER ASSY (RIGHT)	1	1	1			
14	4SV–W0057–00	.PISTON ASSY, CALIPER	1	1	1			
15	3MA–W0047–10	..CALIPER SEAL KIT	1	1	1			
16	4SV–W0057–10	.PISTON ASSY, CALIPER	1	1	1			
17	3GM–W0047–10	..CALIPER SEAL KIT	1	1	1			
18	4SV–W0045–00	.BRAKE PAD KIT	1	1	1			
19	4SV–25919–00	.SUPPORT, PAD	1	1	1			
20	4SV–25924–00	.PIN, PAD	1	1	1			
21	3GM–25925–00	.CLIP	2	2	2			
22	1J3–W0048–00	.BLEED SCREW KIT	1	1	1			
23	90105–105A7	BOLT, WASHER BASED	4	4	4			

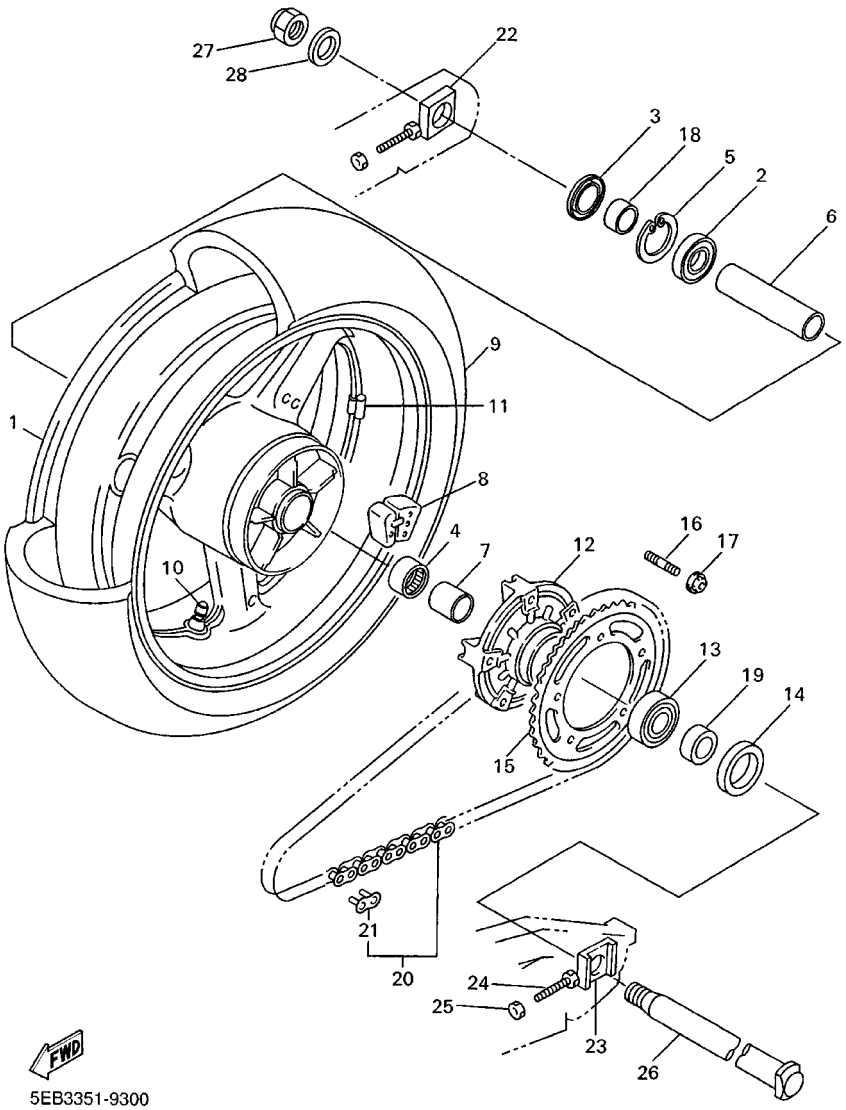

FIG. 30 REAR WHEEL

REF. NO.	PART NO.	DESCRIPTION	5EB1	5EB2	5EB4			REMARKS
1	5EB–25338–00–33	CAST WHEEL, REAR	1	1	1			UR YB FOR BWC1, SM1
	5EB–25338–00–35	CAST WHEEL, REAR	1	1	1			UR SL FOR DPBMC
2	93306–07806	BEARING	1	1	1			
3	93106–35042	OIL SEAL	1	1	1			
4	93317–43580	BEARING	1	1	1			
5	99009–52500	CIRCLIP	1	1	1			
6	4XV–25317–00	SPACER, BEARING	1	1	1			
7	4XV–25383–00	COLLAR, WHEEL	1	1	1			
8	5EB–25364–01	DAMPER	5	5	5			
9	94118–1714K	TIRE (180/55ZR17 73W BATTLAX BT56R)	1	1				UR BRIDGESTONE
	94118–1715U	TIRE (180/55ZR17 D207N)	1		1			UR DUNLOP FOR GBR
10	93900–00030	VALVE, RIM	1	1	1			
11	29L–25398–00	BALANCER, WHEEL (10G)	1	1	1			UR
	29L–25398–10	BALANCER, WHEEL (20G)	1	1	1			UR
	29L–25398–20	BALANCER, WHEEL (30G)	1	1	1			UR
12	5EB–25366–01	CLUTCH, HUB	1	1	1			
13	93306–27802	BEARING	1	1	1			
14	93106–40041	OIL SEAL	1	1	1			
15	5EB–25448–20	SPROCKET, DRIVEN (48T)	1	1	1			
16	90116–10485	BOLT, STUD	5	5	5			
17	95607–10200	NUT, SELF–LOCKING	5	5	5			
18	5EB–25377–00	COLLAR, WHEEL	1	1	1			
19	5EB–25376–00	COLLAR, WHEEL	1	1	1			
20	94581–55116	CHAIN (DID532ZLVKA1–L116)	1	1	1			
21	94681–55031	.JOINT, CHAIN	1	1	1			
22	5EB–25388–00	PULLER, CHAIN 1	1	1	1			
23	5EB–25389–00	PULLER, CHAIN 2	1	1	1			

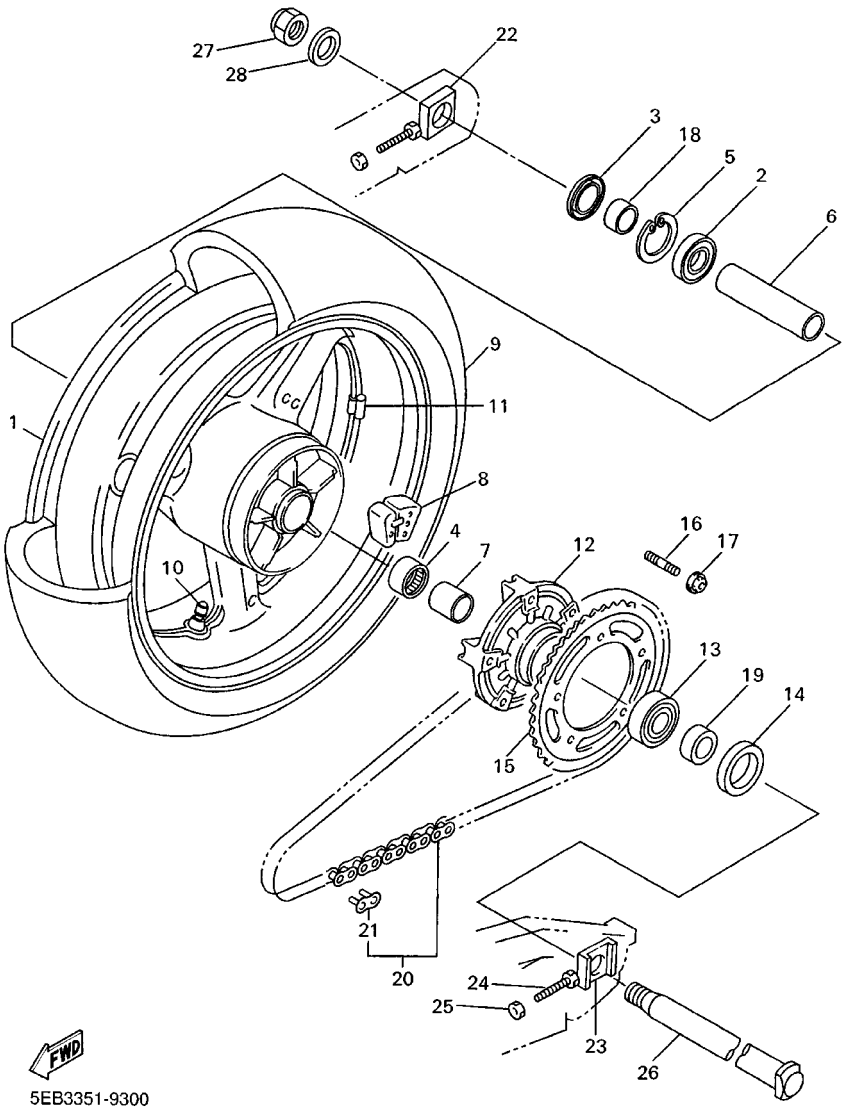

FIG. 30 REAR WHEEL

REF. NO.	PART NO.	DESCRIPTION	5EB1	5EB2	5EB4			REMARKS
24	90101–08766	BOLT	2	2	2			
25	95307–08600	NUT	2	2	2			
26	4XV–25381–00	AXLE, WHEEL	1	1	1			
27	90185–24165	NUT, SELF–LOCKING	1	1	1			
28	90201–257R5	WASHER, PLATE	1	1	1			

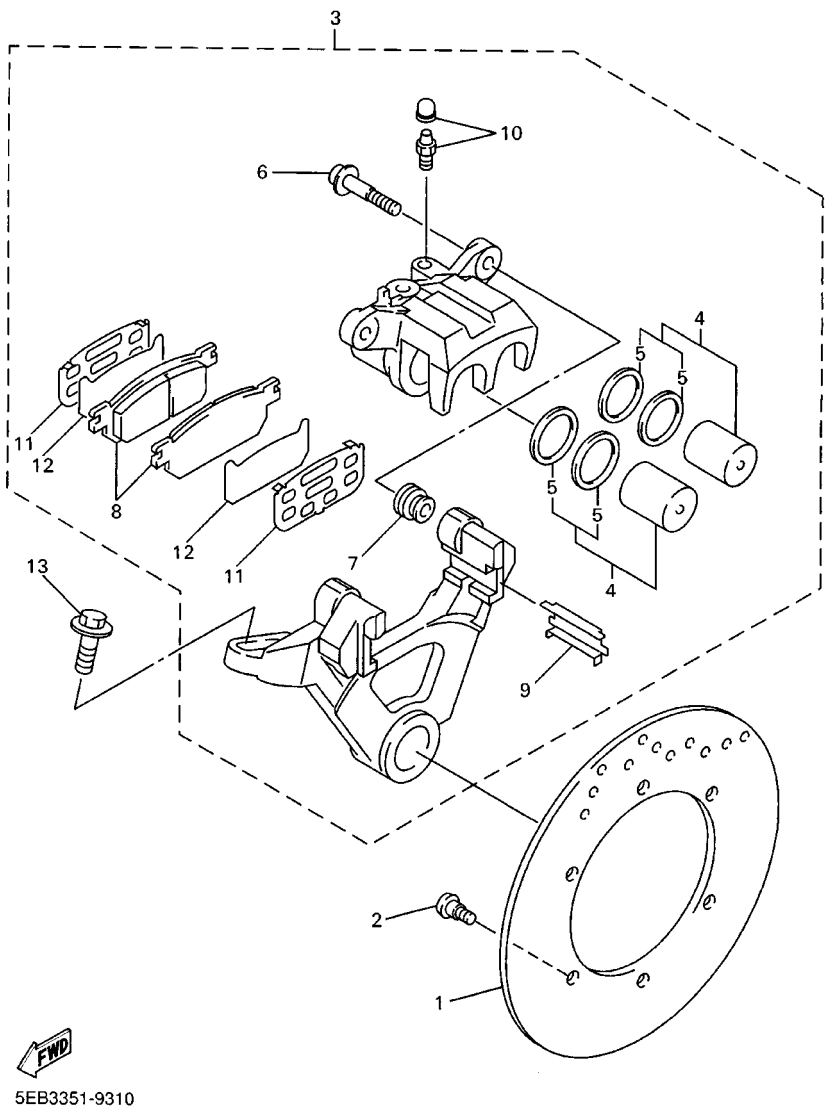

FIG. 31 REAR BRAKE CALIPER

REF. NO.	PART NO.	DESCRIPTION	5EB1	5EB2	5EB4			REMARKS
1	5EB–2582W–00	DISC, REAR BRAKE 2	1	1	1			
2	90109–064G6	BOLT	6	6	6			
3	5EB–2580W–00	CALIPER ASSY, REAR 2	1	1	1			
4	4JG–W0057–00	.PISTON ASSY, CALIPER	1	1	1			
5	4JG–W0047–00	..CALIPER SEAL KIT	1	1	1			
6	4TT–25914–00	.PIN, SLIDE	2	2	2			
7	4TT–25937–00	.BOOT 2	2	2	2			
8	5EB–W0046–00	.BRAKE PAD KIT 2	1	1	1			
9	4TT–25919–00	.SUPPORT, PAD	2	2	2			
10	51L–W0048–00	.BLEED SCREW KIT	1	1	1			
11	5CG–25828–C0	.SHIM, CALIPER	2	2	2			
12	5EB–25828–00	.SHIM, CALIPER	2	2	2			
13	90105–08386	BOLT, WASHER BASED	1	1	1			

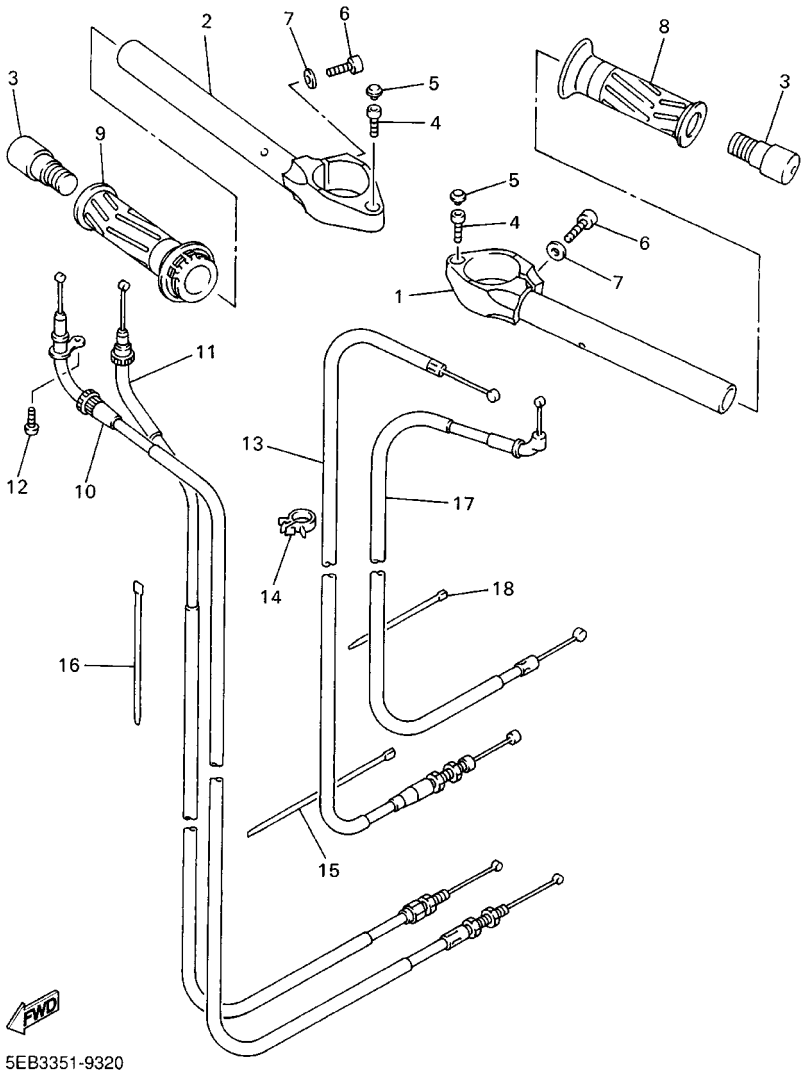

FIG. 32 STEERING HANDLE. CABLE

REF. NO.	PART NO.	DESCRIPTION	5EB1	5EB2	5EB4			REMARKS
1	5EB–26121–00	HANDLEBAR (LEFT)	1	1	1			
2	5EB–26122–00	HANDLEBAR (RIGHT)	1	1	1			
3	5EB–26246–00	END, GRIP	2	2	2			
4	91317–06020	BOLT	2	2	2			
5	2H9–23469–00	CAP, BOLT	2	2	2			
6	91314–08030	BOLT	2	2	2			
7	90201–086J0	WASHER, PLATE	2	2	2			
8	4YR–26241–01	GRIP (LEFT)	1	1	1			
9	5EB–26240–00	GRIP ASSY	1	1	1			
10	5EB–26311–00	CABLE, THROTTLE 1	1	1	1			
11	5EB–26312–00	CABLE, THROTTLE 2	1	1	1			
12	98507–05010	SCREW, PAN HEAD	1	1	1			
13	5EB–26335–00	CABLE, CLUTCH	1	1	1			
14	90464–15157	CLAMP	1	1	1			
15	90464–15195	CLAMP	1	1	1			
16	1UA–82591–00	BAND	1	1	1			
17	5EB–26331–00	CABLE, STARTER 1	1	1	1			
18	90464–13077	CLAMP	1	1	1			

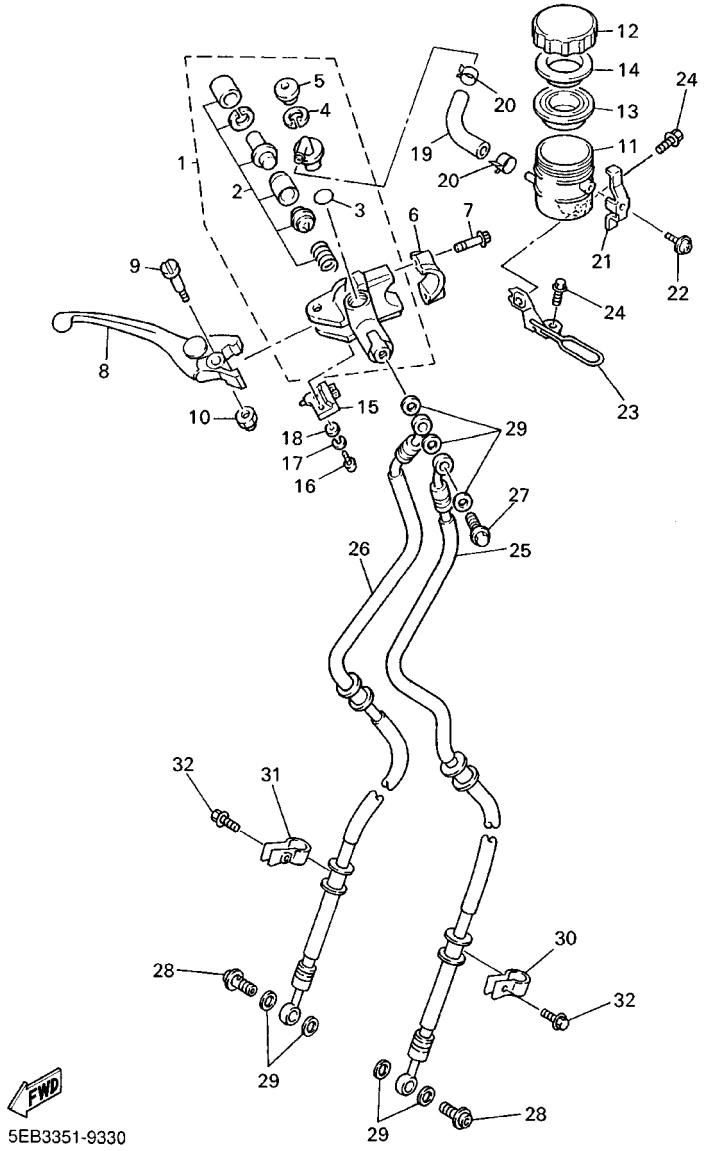

FIG. 33 FRONT MASTER CYLINDER

REF. NO.	PART NO.	DESCRIPTION	5EB1	5EB2	5EB4			REMARKS
1	5EB–W2587–00	MASTER CYLINDER SUB ASSY	1	1	1			
2	4SV–W0041–00	.CYLINDER KIT, MASTER	1	1	1			
3	93210–15620	.O–RING	1	1	1			
4	2VN–25866–00	.CIRCLIP	1	1	1			
5	3FV–2589A–00	.COVER, DUST	1	1	1			
6	56A–25867–00	BRACKET, MASTER CYLINDER	1	1	1			
7	5EB–26332–00	BOLT	2	2	2			
8	5EB–83922–00	LEVER 2	1	1	1			
9	3FV–2589F–00	BOLT, LEVER	1	1	1			
10	95606–06100	NUT, U	1	1	1			
11	3FV–25894–00	TANK, RESERVOIR	1	1	1			
12	3GM–25852–50	CAP, RESERVOIR	1	1	1			
13	3FV–25854–00	DIAPHRAGM, RESERVOIR	1	1	1			
14	2J2–25855–50	BUSH,DIAPHRAGM	1	1	1			
15	3FV–83980–00	FRONT STOP SWITCH ASSY	1	1	1			
16	98502–04012	SCREW, PAN HEAD	1	1	1			
17	92902–04100	WASHER, SPRING	1	1	1			
18	92902–04600	WASHER, PLATE	1	1	1			
19	5EB–2582F–00	HOSE	1	1	1			
20	90467–12085	CLIP	2	2	2			
21	3FV–2589G–00	HOLDER	1	1	1			
22	3GM–2589H–00	SCREW	1	1	1			
23	5EB–26292–01	STAY	1	1	1			
24	95027–06012	BOLT, FLANGE	2	2	2			
25	5EB–25872–00	HOSE, BRAKE 1	1	1	1			
26	5EB–25873–00	HOSE, BRAKE 2	1	1	1			
27	90401–10160	BOLT, UNION	1	1	1			

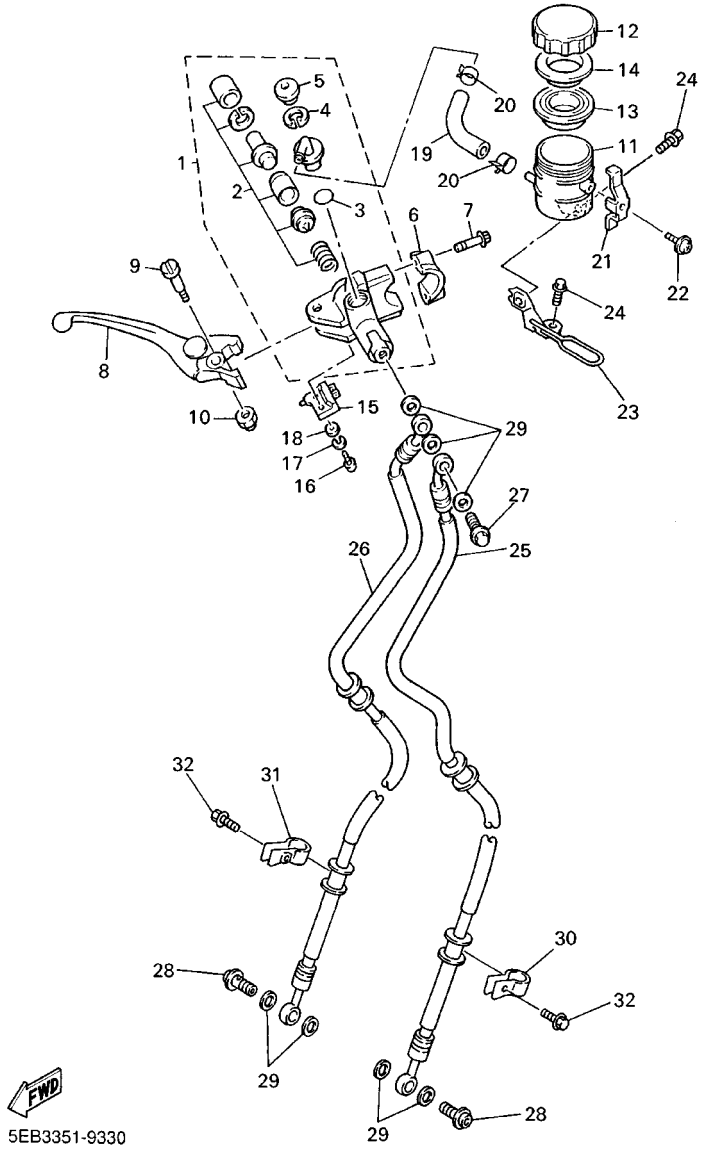

FIG. 33 FRONT MASTER CYLINDER

REF. NO.	PART NO.	DESCRIPTION	5EB1	5EB2	5EB4			REMARKS
28	90401–10172	BOLT, UNION	2	2	2			
29	90201–10118	WASHER, PLATE	7	7	7			
30	3EN–25875–01	HOLDER, BRAKE HOSE 1	1	1	1			
31	2R8–25876–01	HOLDER, BRAKE HOSE 2	1	1	1			
32	95027–06020	BOLT, FLANGE	2	2	2			

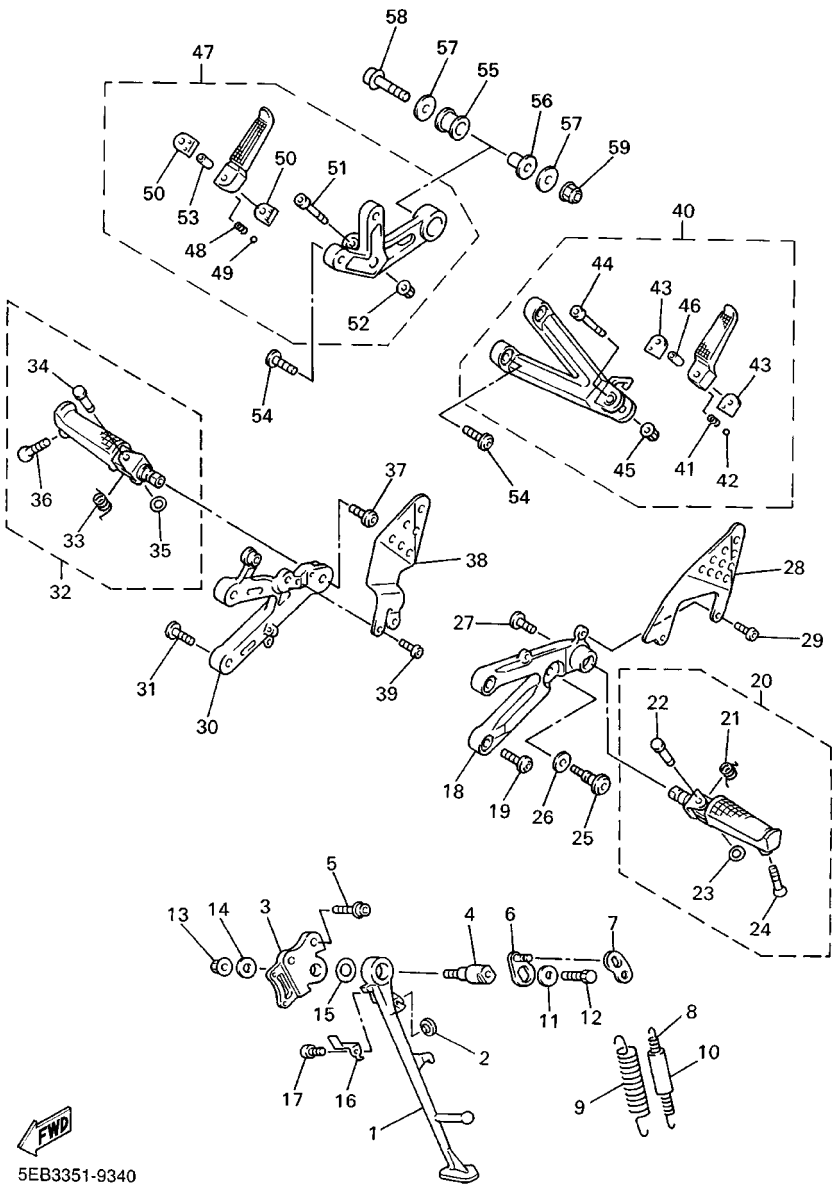

FIG. 34 STAND. FOOTREST

REF. NO.	PART NO.	DESCRIPTION	5EB1	5EB2	5EB4			REMARKS
1	5EB–27311–00	STAND, SIDE	1	1	1			
2	128–27114–00	STOPPER, MAIN STAND	1	1	1			
3	4NX–27321–00	BRACKET, SIDE STAND	1	1	1			
4	4NX–27351–00	GUIDE, SIDE STAND	1	1	1			
5	90109–105G7	BOLT	2	2	2			
6	5EB–27352–00	HOOK, SIDE STAND	1	1	1			
7	36Y–27315–00	LINK, SIDE STAND	1	1	1			
8	90506–18224	SPRING, TENSION	1	1	1			
9	90506–26225	SPRING, TENSION	1	1	1			
10	1TX–27351–00	GUIDE, SIDE STAND	1	1	1			
11	90201–081R9	WASHER, PLATE	1	1	1			
12	90101–08662	BOLT	1	1	1			
13	95607–10200	NUT, SELF–LOCKING	1	1	1			
14	90201–101J1	WASHER, PLATE	1	1	1			
15	90201–146F9	WASHER, PLATE	1	1	1			
16	4NX–27315–00	LINK, SIDE STAND	1	1	1			
17	90110–06226	BOLT, HEXAGON SOCKET HEAD	1	1	1			
18	5EB–27442–00	BRACKET 2	1	1	1			
19	90109–085G6	BOLT	2	2	2			
20	5EB–27410–00	FRONT FOOTREST ASSY (LEFT)	1	1	1			
21	90508–183B9	.SPRING, TORSION	1	1	1			
22	90243–08029	.PIN	1	1	1			
23	90201–06042	.WASHER, PLATE	1	1	1			
24	90109–083E2	.BOLT	1	1	1			
25	4BP–27434–01	BOLT	1	1	1			
26	90201–08326	WASHER, PLATE	1	1	1			
27	90109–103A9	BOLT	1	1	1			

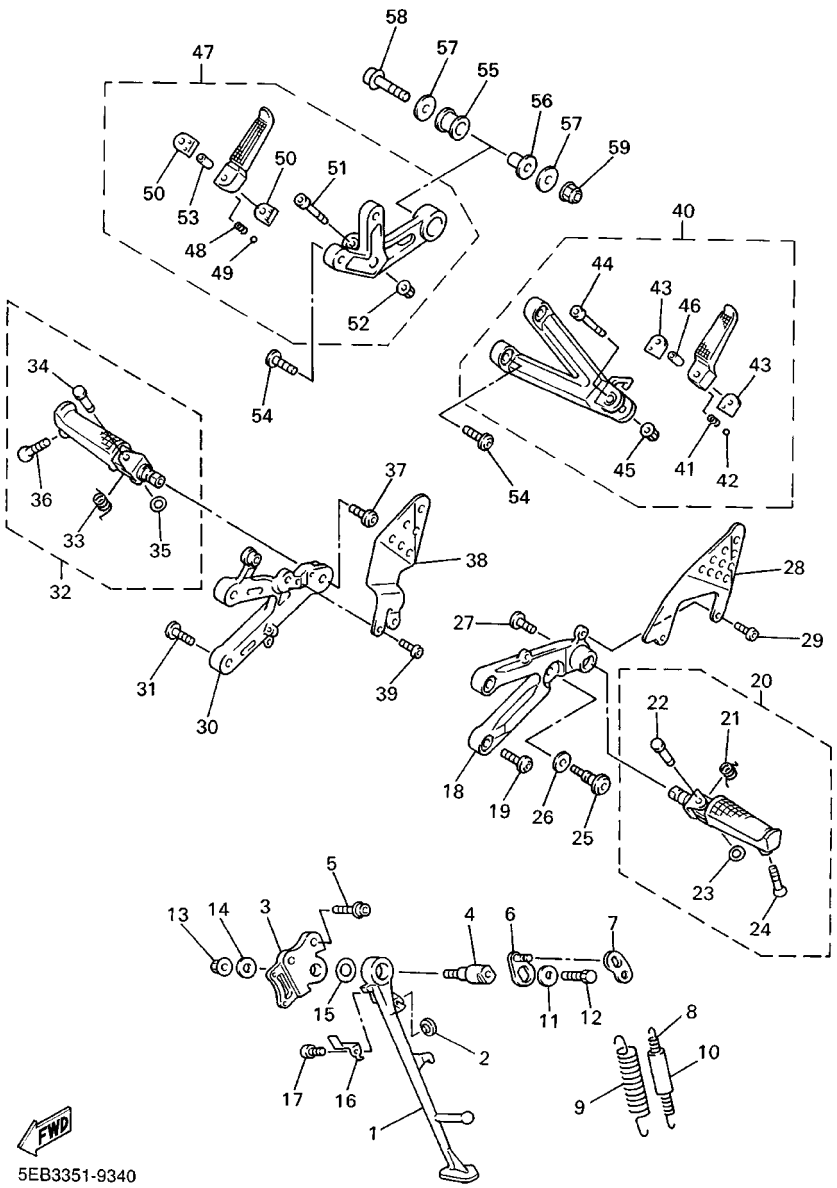

FIG. 34 STAND. FOOTREST

REF. NO.	PART NO.	DESCRIPTION	5EB1	5EB2	5EB4			REMARKS
28	5EB–27445–00	PLATE 1	1	1	1			
29	90111–06003	BOLT	2	2	2			
30	5EB–27443–00	BRACKET 3	1	1	1			
31	90109–085G6	BOLT	2	2	2			
32	5EB–27420–00	FRONT FOOTREST ASSY (RIGHT)	1	1	1			
33	90508–184B0	.SPRING, TORSION	1	1	1			
34	90243–08029	.PIN	1	1	1			
35	90201–06042	.WASHER, PLATE	1	1	1			
36	90109–083E2	.BOLT	1	1	1			
37	90109–103A9	BOLT	1	1	1			
38	5EB–27446–00	PLATE 2	1	1	1			
39	90111–06003	BOLT	2	2	2			
40	5EB–27430–00	REAR FOOTREST ASSY 1	1	1	1			
41	90501–12743	.SPRING, COMPRESSION	1	1	1			
42	93501–04011	.BALL	1	1	1			
43	1HX–27437–00	.WASHER, SPECIAL	2	2	2			
44	91314–06045	.BOLT	1	1	1			
45	95604–06200	.NUT, U FLANGE	1	1	1			
46	90387–064H8	.COLLAR	1	1	1			
47	5EB–27440–00	REAR FOOTREST ASSY 2	1	1	1			
48	90501–12743	.SPRING, COMPRESSION	1	1	1			
49	93501–04011	.BALL	1	1	1			
50	1HX–27437–00	.WASHER, SPECIAL	2	2	2			
51	91314–06045	.BOLT	1	1	1			
52	95604–06200	.NUT, U FLANGE	1	1	1			
53	90387–064H8	.COLLAR	1	1	1			
54	90109–085G6	BOLT	4	4	4			

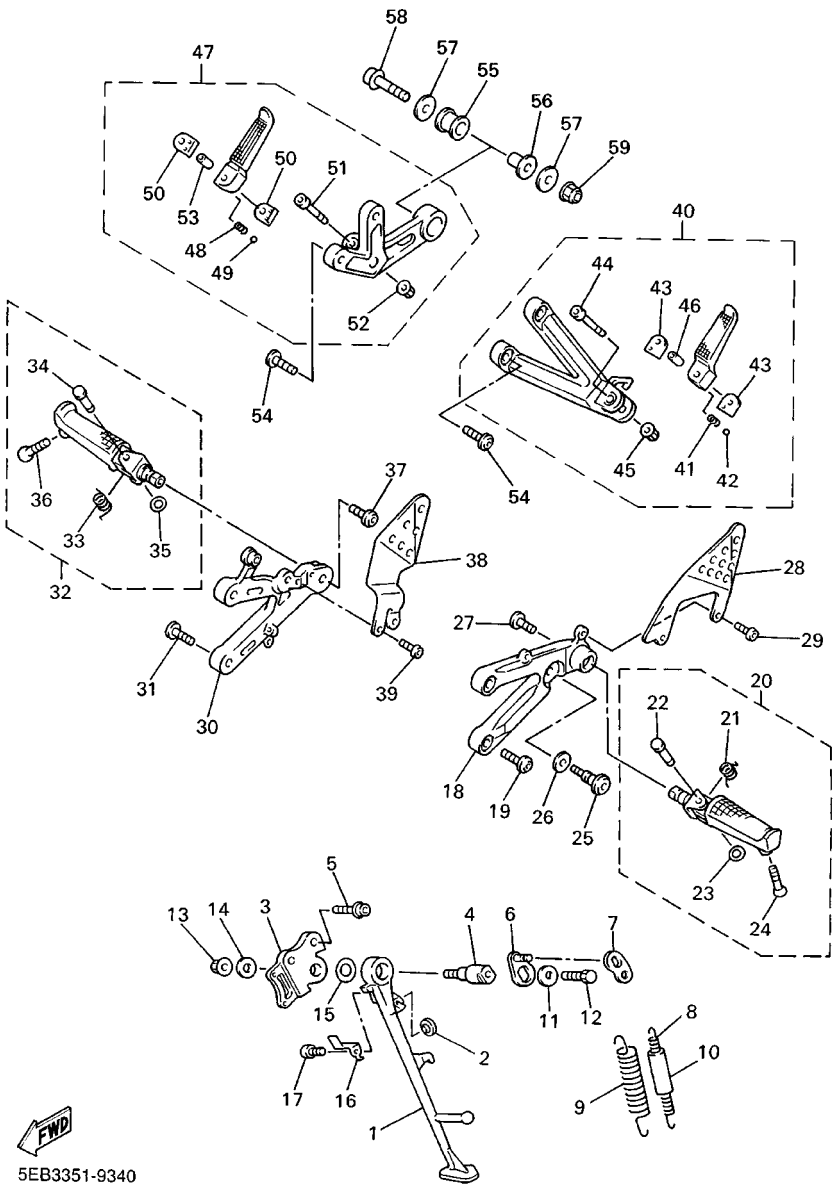

FIG. 34 STAND. FOOTREST

REF. NO.	PART NO.	DESCRIPTION	5EB1	5EB2	5EB4			REMARKS
55	36Y–27424–00	DAMPER, FOOTREST 2	1	1	1			
56	90387–10636	COLLAR	1	1	1			
57	90201–10669	WASHER, PLATE	2	2	2			
58	90105–10271	BOLT, WASHER BASED	1	1	1			
59	95607–10200	NUT, SELF–LOCKING	1	1	1			

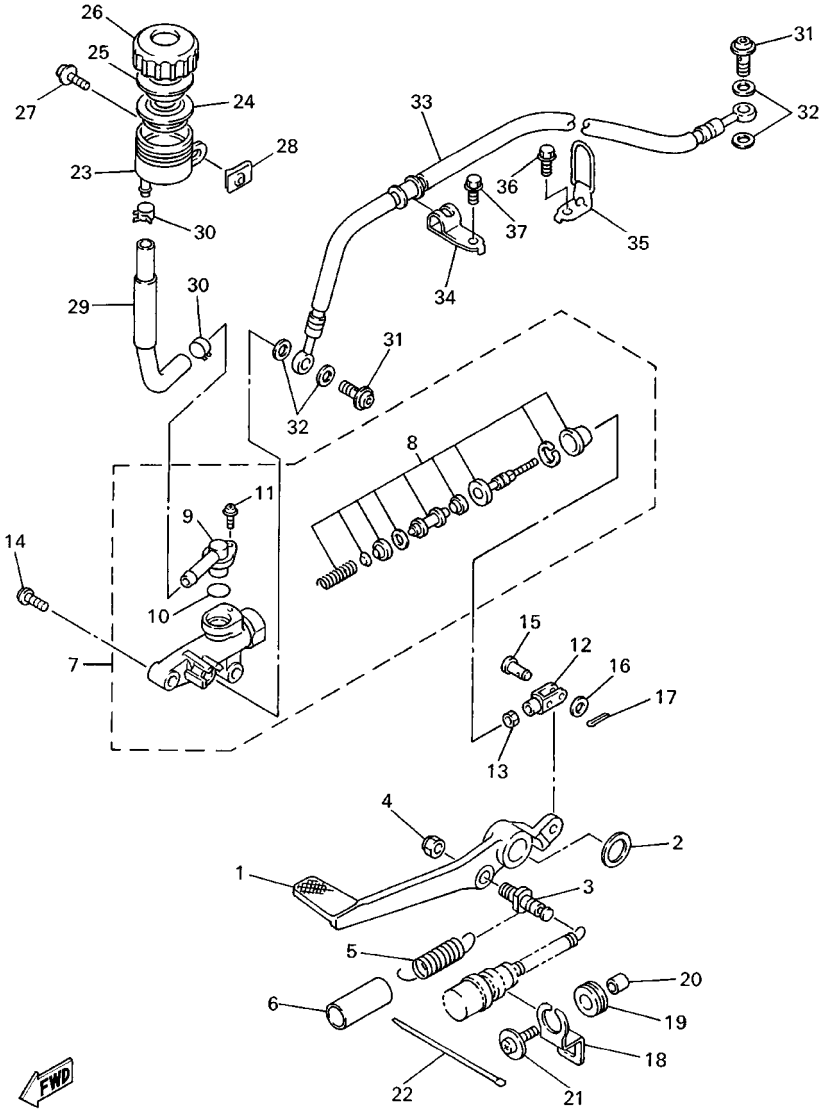

5EB3351-9350

FIG. 35 REAR MASTER CYLINDER

REF. NO.	PART NO.	DESCRIPTION	5EB1	5EB2	5EB4			REMARKS
1	5EB–27211–00	PEDAL, BRAKE	1	1	1			
2	90206–17084	WASHER, WAVE	1	1	1			
3	5EB–27813–00	PIN, PEDAL CRANK	1	1	1			
4	95604–08100	NUT, U	1	1	1			
5	90506–20193	SPRING, TENSION	1	1	1			
6	90446–15386	HOSE	1	1	1			
7	3TU–2583V–01	RR. MASTER CYLINDER ASSY.	1	1	1			
8	3TU–W0042–51	.CYLINDER KIT, MASTER	1	1	1			
9	3LN–2582A–00	.JOINT	1	1	1			
10	3LN–2585F–00	.O–RING	1	1	1			
11	3LN–2585H–00	.SCREW,SET	1	1	1			
12	4XV–27222–00	JOINT	1	1	1			
13	95307–08700	NUT	1	1	1			
14	92017–08030	BOLT, BUTTON HEAD	2	2	2			
15	91701–06018	PIN, CLEVIS	1	1	1			
16	92907–06200	WASHER	1	1	1			
17	91401–16012	PIN, COTTER	1	1	1			
18	5EB–2144G–00	STAY, STOP SWITCH	1	1	1			
19	90480–12607	GROMMET	1	1	1			
20	90387–06023	COLLAR	1	1	1			
21	90159–06150	SCREW, WITH WASHER	1	1	1			
22	5Y9–12491–00	CLAMP 1	1	1	1			
23	31A–25894–01	TANK, RESERVOIR	1	1	1			
24	360–25854–01	DIAPHRAGM, RESERVOIR	1	1	1			
25	2GU–25855–00	BUSH,DIAPHRAGM	1	1	1			
26	2KF–25852–50	CAP, RESERVOIR	1	1	1			
27	90159–06085	SCREW, WITH WASHER	1	1	1			

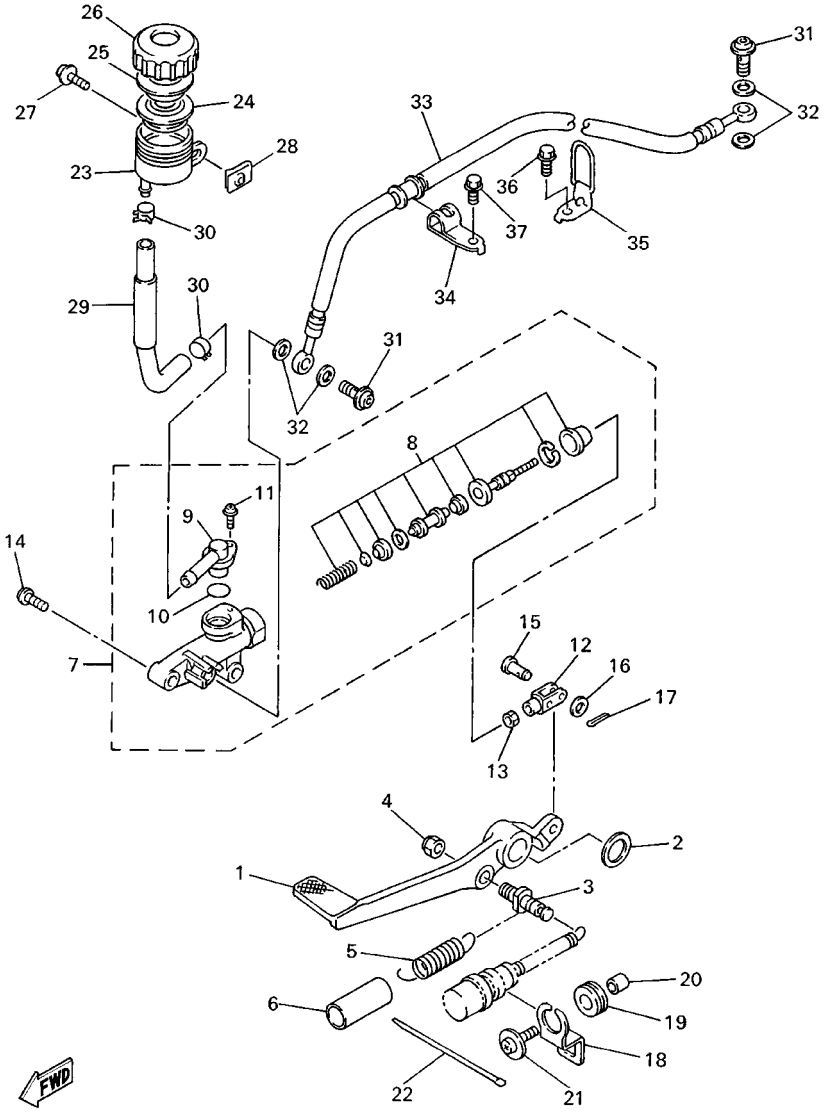

5EB3351-9350

FIG. 35 REAR MASTER CYLINDER

REF. NO.	PART NO.	DESCRIPTION	5EB1	5EB2	5EB4			REMARKS
28	90183–06053	NUT, SPRING	1	1	1			
29	5EB–25895–00	HOSE, RESERVOIR	1	1	1			
30	90467–14057	CLIP	2	2	2			
31	90401–10172	BOLT, UNION	2	2	2			
32	90201–10118	WASHER, PLATE	4	4	4			
33	5EB–25874–00	HOSE, BRAKE	1	1	1			
34	5EB–25886–01	HOLDER, BRAKE HOSE	1	1	1			
35	5EB–25887–00	HOLDER, BRAKE HOSE	1	1	1			
36	95027–06020	BOLT, FLANGE	1	1	1			
37	90105–06718	BOLT, WASHER BASED	1	1	1			

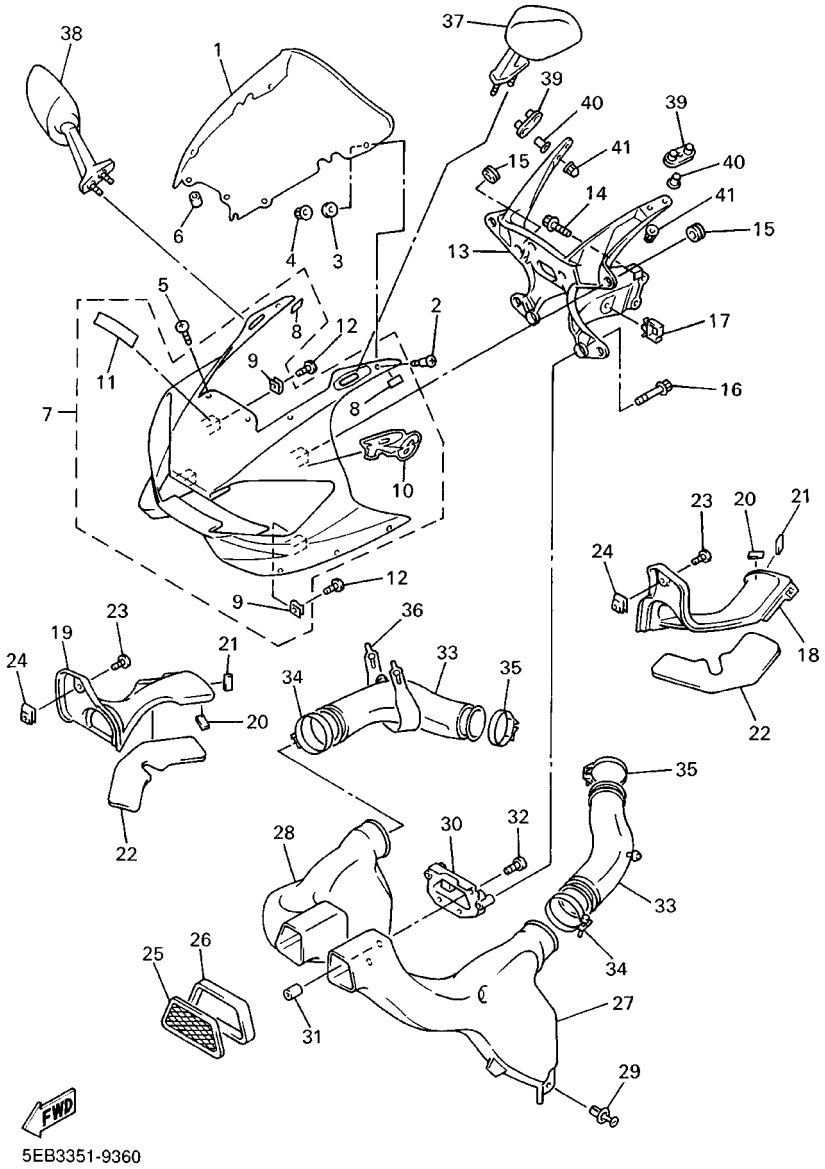

FIG. 36 COWLING 1

REF. NO.	PART NO.	DESCRIPTION	5EB1	5EB2	5EB4			REMARKS
1	5EB–28381–00	WINDSHIELD	1	1				
	5EB–28381–10	WINDSHIELD			1			
2	90149–05273	SCREW	2	2	2			
3	4FM–28215–00	WASHER, SPECIAL	2	2	2			
4	95707–05500	NUT, FLANGE	2	2	2			
5	90150–05023	SCREW, ROUND HEAD	4	4	4			
6	90179–05523	NUT	4	4	4			
7	5EB–Y283G–00–0X	BODY, FRONT UPPER 1	1	1	1			UR VRC1/MBL2 FOR BWC1
	5EB–Y283G–10–P0	BODY, FRONT UPPER 1	1	1	1			UR DPBMC
	5EB–Y283G–20–P1	BODY, FRONT UPPER 1	1	1				UR SM1
8	3TU–2178A–00	LABEL	2	2	2			
9	90183–05074	.NUT, SPRING	5	5	5			
10	5EB–28315–00	.EMBLEM	1	1	1			UR FOR BWC1
	5EB–28315–10	.EMBLEM	1	1	1			UR FOR DPBMC
	5EB–28315–20	.EMBLEM	1	1				UR FOR SM1
11	99236–00080	.EMBLEM, YAMAHA	1	1	1			UR FOR BWC1
	99231–00080	.EMBLEM, YAMAHA	1	1	1			UR FOR DPBMC
	99234–00080	.EMBLEM, YAMAHA	1	1				UR FOR SM1
12	90154–05005	SCREW, BINDING	5	5	5			
13	5EB–28356–01	STAY 1	1	1	1			
14	95824–08025	BOLT, FLANGE	2	2	2			
15	4XV–83513–00	DAMPER	7	7	7			
16	95024–06016	BOLT, FLANGE	2	2	2			
17	90464–16025	CLAMP	1	1	1			
18	5EB–2837L–00	PANEL, CONSOLE 1	1	1	1			
19	5EB–2837M–00	PANEL, CONSOLE 2	1	1	1			
20	51Y–21639–00	DAMPER 2	2	2	2			

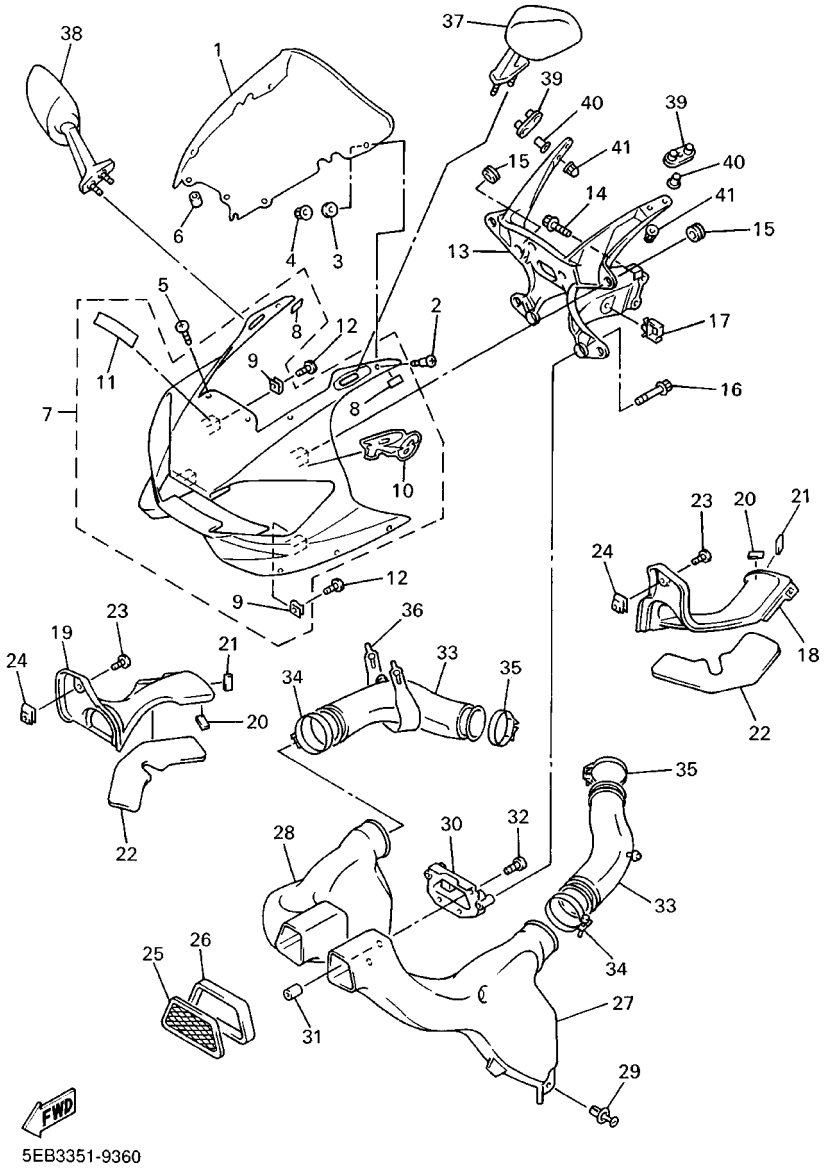

FIG. 36 COWLING 1

REF. NO.	PART NO.	DESCRIPTION	5EB1	5EB2	5EB4			REMARKS
21	27V–24184–00	DAMPER, LOCATING 4	2	2	2			
22	5EB–2837J–00	DAMPER 5	2	2	2			
23	90150–05039	SCREW, ROUND HEAD	2	2	2			
24	90183–05024	NUT, SPRING	2	2	2			
25	5EB–2837N–00	GRILL, AIR INTAKE 1	1	1	1			
26	5EB–28371–00	DAMPER	1	1	1			
27	5EB–2838R–00	DUCT 2	1	1	1			
28	5EB–2838T–00	DUCT 3	1	1	1			
29	90269–07076	RIVET	2	2	2			
30	5EB–28342–01	JOINT	1	1	1			
31	90179–05523	NUT	4	4	4			
32	98507–05014	SCREW, PAN HEAD	4	4	4			
33	5EB–1446F–00	JOINT, SURGE TANK 1	2	2	2			
34	4TV–13575–00	BAND	2	2	2			
35	90460–59211	CLAMP, HOSE	2	2	2			
36	5EB–2834V–00	PROTECTOR 1	1	1	1			
37	4YR–26280–01	REAR VIEW MIRROR ASSY(LEFT)	1	1	1			
38	4YR–26290–01	REAR VIEW MIRROR ASSY(RIGHT)	1	1	1			
39	5EB–26298–01	PLATE, MIRROR FITTING 1	2	2	2			
40	90387–0602X	COLLAR	4	4	4			
41	90176–06055	NUT, CROWN	4	4	4			

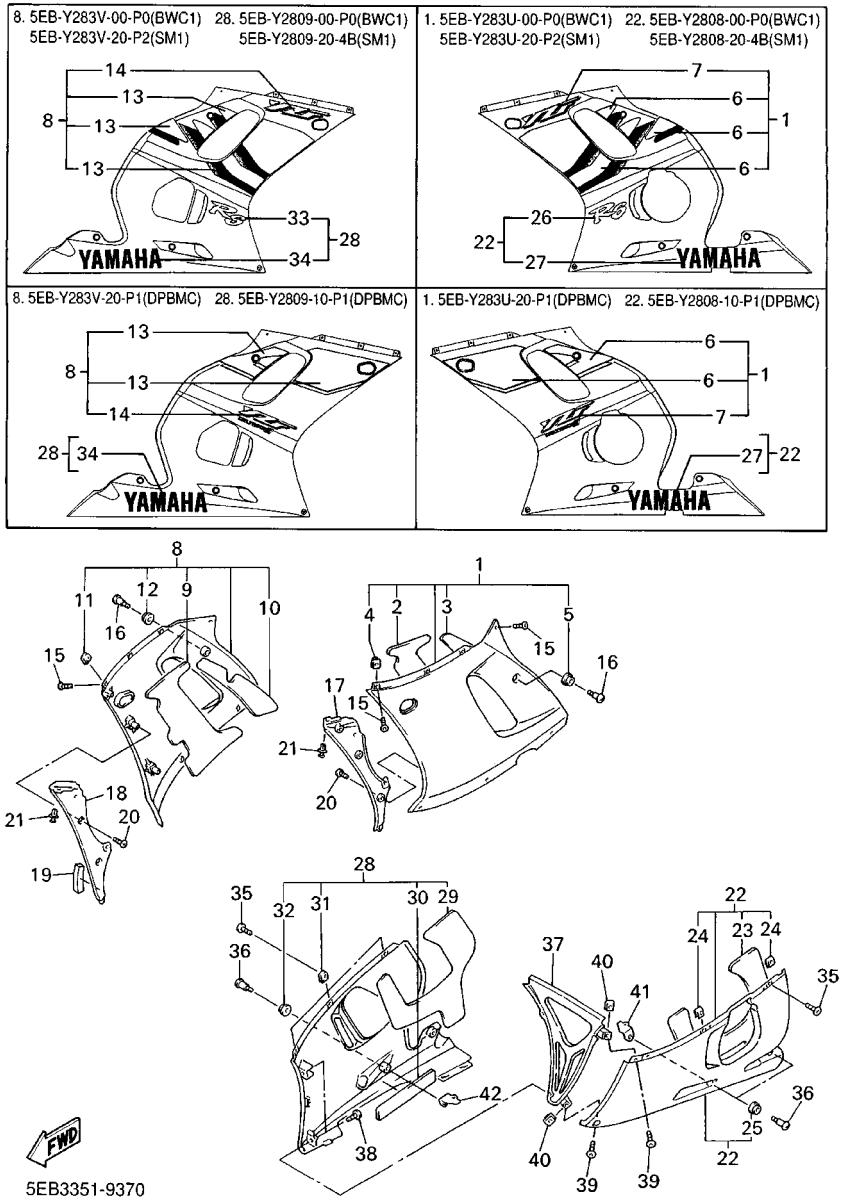

FIG. 37 COWLING 2

REF. NO.	PART NO.	DESCRIPTION	5EB1	5EB2	5EB4			REMARKS
1	5EB–Y283U–00–P0	PANEL ASSEMBLY 1	1	1	1			UR BWC1
	5EB–Y283U–20–P1	PANEL ASSEMBLY 1	1	1	1			UR DPBMC
	5EB–Y283U–20–P2	PANEL ASSEMBLY 1	1	1				UR SM1
2	5EB–28415–00	.DAMPER 1	1	1	1			
3	5EB–28416–00	.DAMPER 2	1	1	1			
4	90183–05024	.NUT, SPRING	3	3	3			
5	90480–13398	.GROMMET	1	1	1			
6	5EB–28301–00	.GRAPHIC SET, LOWER COVER 1	1	1	1			UR FOR BWC1
	5EB–28304–00	.GRAPHICSET, LOWER COVER 3	1	1	1			UR FOR DPBMC
	5EB–28301–10	.GRAPHIC SET, LOWER COVER 1	1	1				UR FOR SM1
7	5EB–2839H–00	.EMBLEM 1	1	1	1			UR FOR BWC1
	5EB–28338–00	.EMBLEM	1	1	1			UR FOR DPBMC
	5EB–2839H–10	.EMBLEM 1	1	1				UR FOR SM1
8	5EB–Y283V–00–P0	PANEL ASSEMBLY 2	1	1	1			UR BWC1
	5EB–Y283V–20–P1	PANEL ASSEMBLY 2	1	1	1			UR DPBMC
	5EB–Y283V–20–P2	PANEL ASSEMBLY 2	1	1				UR SM1
9	5EB–28415–10	.DAMPER 1	1	1	1			
10	5EB–28416–10	.DAMPER 2	1	1	1			
11	90183–05024	.NUT, SPRING	3	3	3			
12	90480–13398	.GROMMET	1	1	1			
13	5EB–28303–00	.GRAPHIC SET,LOWER COVER 2	1	1	1			UR FOR BWC1
	5EB–28305–00	.UNDER COVER GRAPHIC SET,4	1	1	1			UR FOR DPBMC
	5EB–28303–10	.GRAPHIC SET,LOWER COVER 2	1	1				UR FOR SM1
14	5EB–2839H–00	.EMBLEM 1	1	1	1			UR FOR BWC1
	5EB–28338–00	.EMBLEM	1	1	1			UR FOR DPBMC
	5EB–2839H–10	.EMBLEM 1	1	1				UR FOR SM1
15	90150–05039	SCREW, ROUND HEAD	8	8	8			

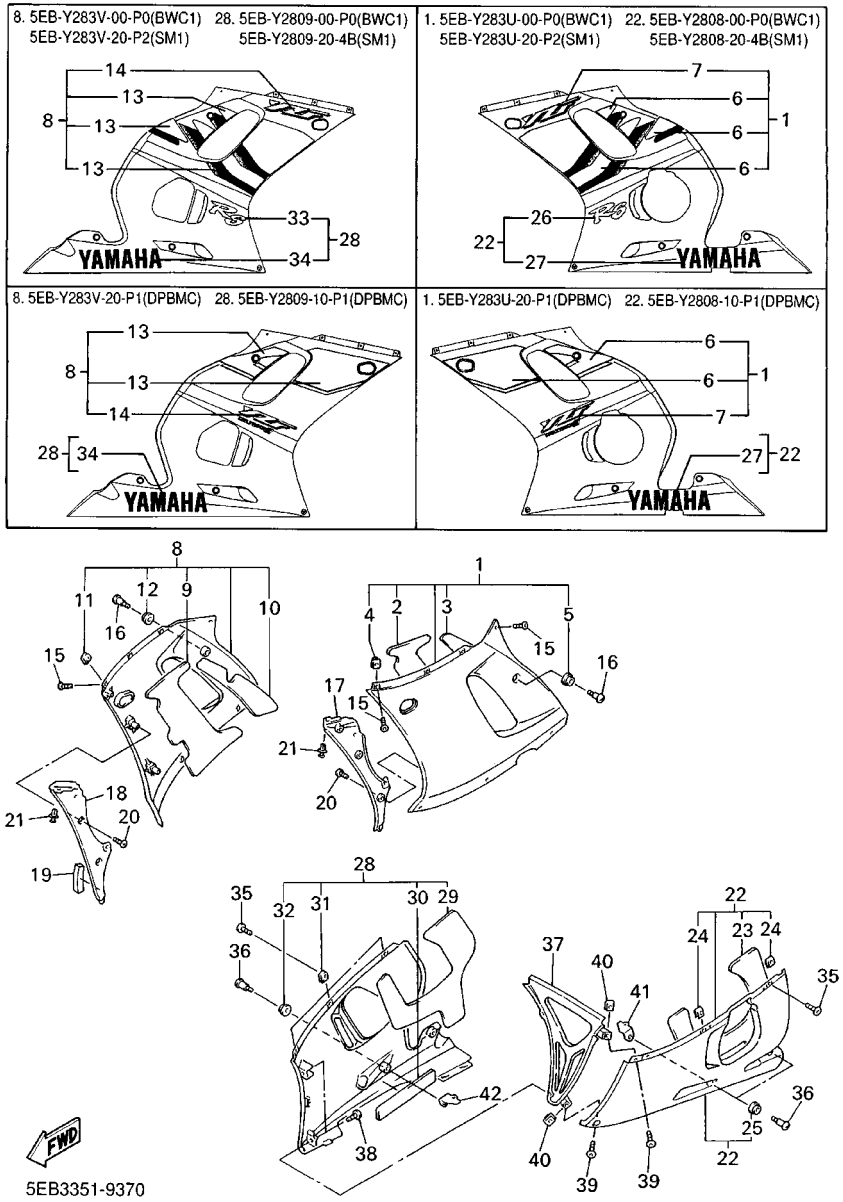

FIG. 37 COWLING 2

REF. NO.	PART NO.	DESCRIPTION	5EB1	5EB2	5EB4			REMARKS
16	90150–06036	SCREW, ROUND HEAD	2	2	2			
17	5EB–2836K–00	PANEL, INNER 1	1	1	1			
18	5EB–2836L–00	PANEL, INNER 2	1	1	1			
19	8U9–77268–00	LINING,SHROUD 8	1	1	1			
20	97704–40012	SCREW, TAPPING	6	6	6			
21	90269–07076	RIVET	2	2	2			
22	5EB–Y2808–00–P0	COVER ASSY, UNDER	1	1	1			UR MBL2 FOR BWC1
	5EB–Y2808–10–P1	COVER ASSY, UNDER	1	1	1			UR DPBMC
	5EB–Y2808–20–4B	COVER ASSY, UNDER	1	1				UR BL2 FOR SM1
23	5EB–2834E–00	.DAMPER	1	1	1			
24	90183–05024	.NUT, SPRING	2	2	2			
25	90480–13398	.GROMMET	2	2	2			
26	5EB–28328–00	.EMBLEM	1	1	1			UR FOR BWC1
	5EB–28328–10	.EMBLEM	1	1				UR FOR SM1
27	4XV–2153E–20	.EMBLEM, YAMAHA	1	1	1			UR FOR BWC1,SM1
	4XV–2153E–00	.EMBLEM, YAMAHA	1	1	1			UR FOR DPBMC
28	5EB–Y2809–00–P0	COVER ASSY 2, UNDER	1	1	1			UR MBL2 FOR BWC1
	5EB–Y2809–10–P1	COVER ASSY 2, UNDER	1	1	1			UR DPBMC
	5EB–Y2809–20–4B	COVER ASSY 2, UNDER	1	1				UR BL2 FOR SM1
29	5EB–2834F–00	.DAMPER	1	1	1			
30	5EB–2838G–00	.SEAT 1	1	1	1			
31	90183–05024	.NUT, SPRING	3	3	3			
32	90480–13398	.GROMMET	2	2	2			
33	5EB–28328–00	.EMBLEM	1	1	1			UR FOR BWC1
	5EB–28328–10	.EMBLEM	1	1				UR FOR SM1
34	4XV–2153E–20	.EMBLEM, YAMAHA	1	1	1			UR FOR BWC1,SM1
	4XV–2153E–00	.EMBLEM, YAMAHA	1	1	1			UR FOR DPBMC

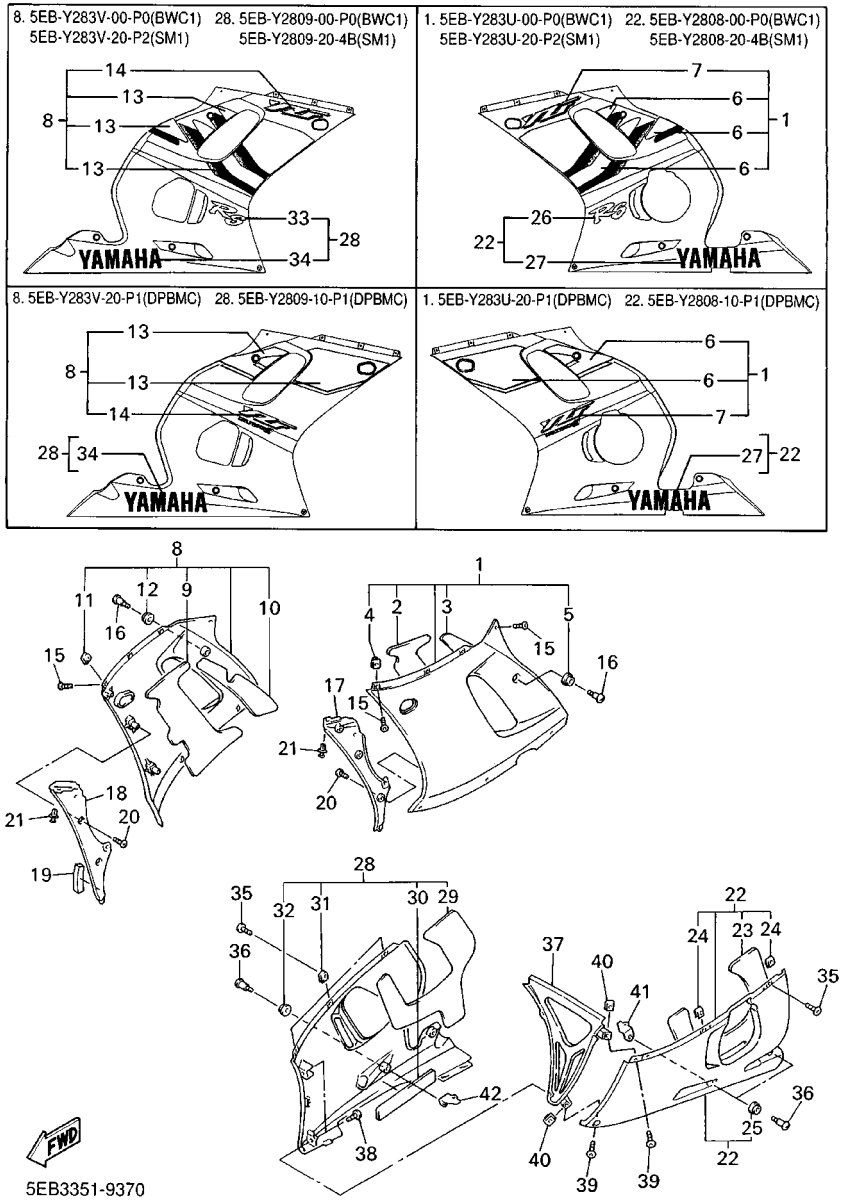

FIG. 37 COWLING 2

REF. NO.	PART NO.	DESCRIPTION	5EB1	5EB2	5EB4			REMARKS
35	90150–05039	SCREW, ROUND HEAD	5	5	5			
36	90150–06036	SCREW, ROUND HEAD	4	4	4			
37	5EB–2836M–00	PANEL, INNER 3	1	1	1			
38	97707–50016	SCREW, TAPPING	2	2	2			
39	90150–05039	SCREW, ROUND HEAD	2	2	2			
40	90183–05024	NUT, SPRING	2	2	2			
41	5EB–2836A–00	BRACKET 1	1	1	1			
42	5EB–2836E–00	BRACKET 2	1	1	1			

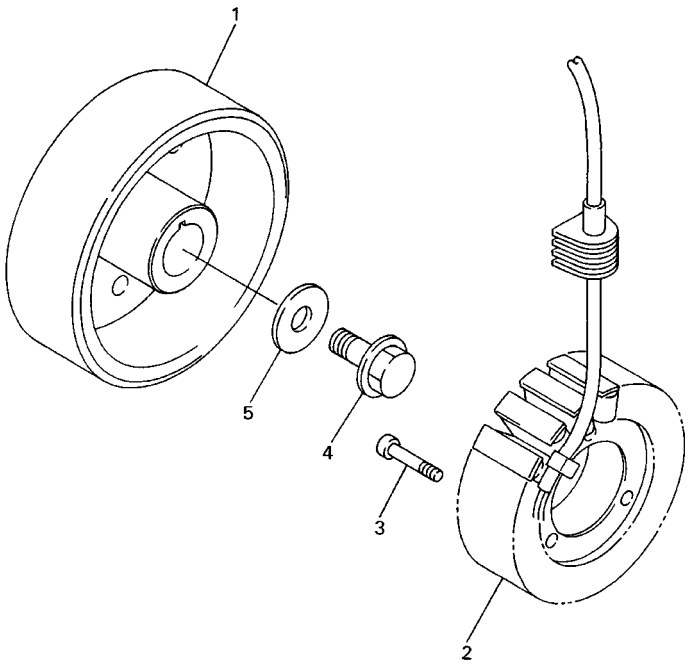

5EB3351-9380

FIG. 38 GENERATOR

REF. NO.	PART NO.	DESCRIPTION	5EB1	5EB2	5EB4			REMARKS
1	5EB–81450–00	ROTOR ASSY	1	1	1			
2	5EB–81410–00	STATOR ASSY	1	1	1			
3	91317–06035	BOLT	3	3	3			
4	90105–126A8	BOLT, WASHER BASED	1	1	1			
5	90201–12008	WASHER, PLATE	1	1	1			

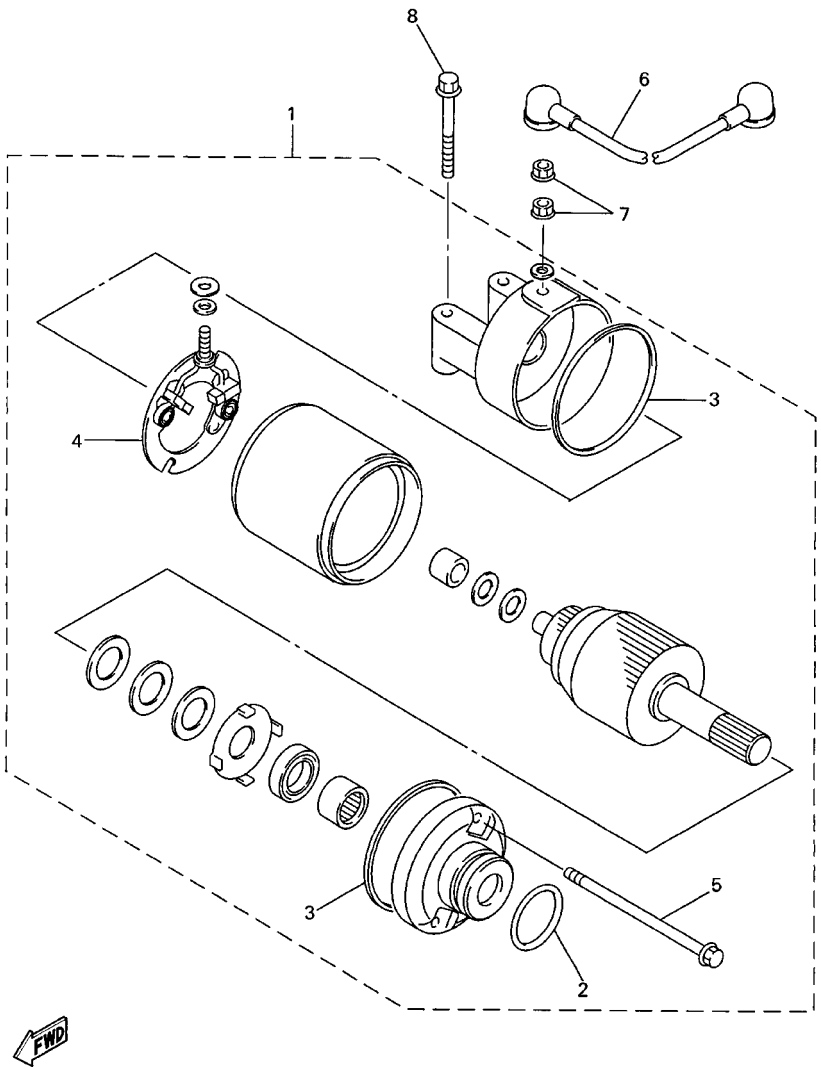

5EB3351-9390

FIG. 39 STARTING MOTOR

REF. NO.	PART NO.	DESCRIPTION	5EB1	5EB2	5EB4			REMARKS
1	5EB–81890–00	MOTOR ASSY	1	1	1			
2	1FK–81847–00	.O–RING	1	1	1			
3	4WP–81844–00	.GASKET	2	2	2			
4	4WP–81801–00	.BRUSH SET	1	1	1			
5	4WP–81826–00	.BOLT	2	2	2			
6	4XV–81815–00	CORD, STARTER MOTOR	1	1	1			
7	4XV–8182A–00	NUT	2	2	2			
8	95027–06040	BOLT, FLANGE	2	2	2			

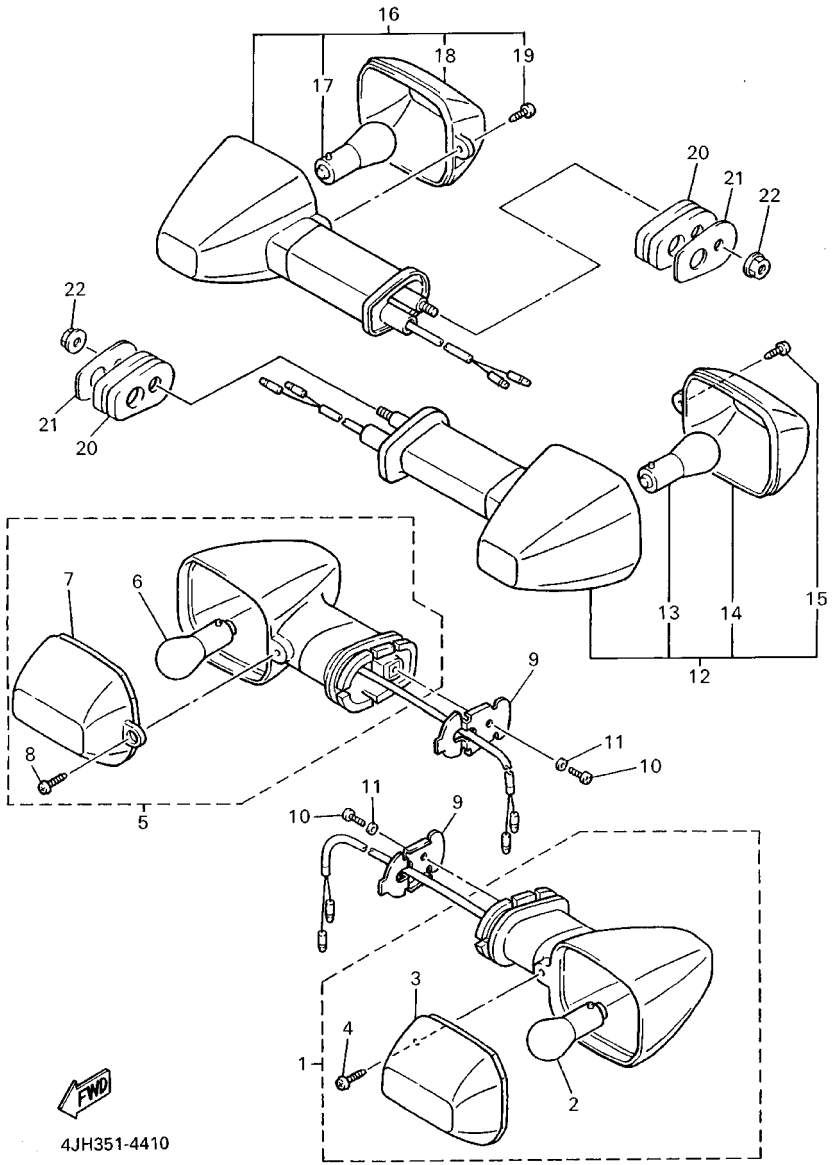

FIG. 40 FLASHER LIGHT

REF. NO.	PART NO.	DESCRIPTION	5EB1	5EB2	5EB4			REMARKS
1	4JH–83310–01	FRONT FLASHER LIGHT ASSY 1	1	1	1			
2	306–83311–40	.BULB, FLASHER (12V–21W)	1	1	1			
3	4JH–83332–00	.LENS, FLASHER	1	1	1			
4	97702–40610	.SCREW, TAPPING	1	1	1			
5	4JH–83320–01	FRONT FLASHER LIGHT ASSY 2	1	1	1			
6	306–83311–40	.BULB, FLASHER (12V–21W)	1	1	1			
7	4JH–83342–00	.LENS, FLASHER 2	1	1	1			
8	97702–40610	.SCREW, TAPPING	1	1	1			
9	4JH–83318–00	STAY, FLASHER 1	2	2	2			
10	98507–04008	SCREW, PAN HEAD	2	2	2			
11	92907–04600	WASHER	2	2	2			
12	4JH–83330–00	REAR FLASHER LIGHT ASSY 1	1	1	1			
13	306–83311–40	.BULB, FLASHER (12V–21W)	1	1	1			
14	4JH–83332–00	.LENS, FLASHER	1	1	1			
15	97702–40610	.SCREW, TAPPING	1	1	1			
16	4JH–83340–00	FLASHER LIGHT ASSY 2	1	1	1			
17	306–83311–40	.BULB, FLASHER (12V–21W)	1	1	1			
18	4JH–83342–00	.LENS, FLASHER 2	1	1	1			
19	97702–40610	.SCREW, TAPPING	1	1	1			
20	4FM–83345–00	PLUG, BLIND	2	2	2			
21	4FM–83369–00	STAY, FLASHER 2	2	2	2			
22	95707–06500	NUT, FLANGE	2	2	2			

FIG. 41 METER

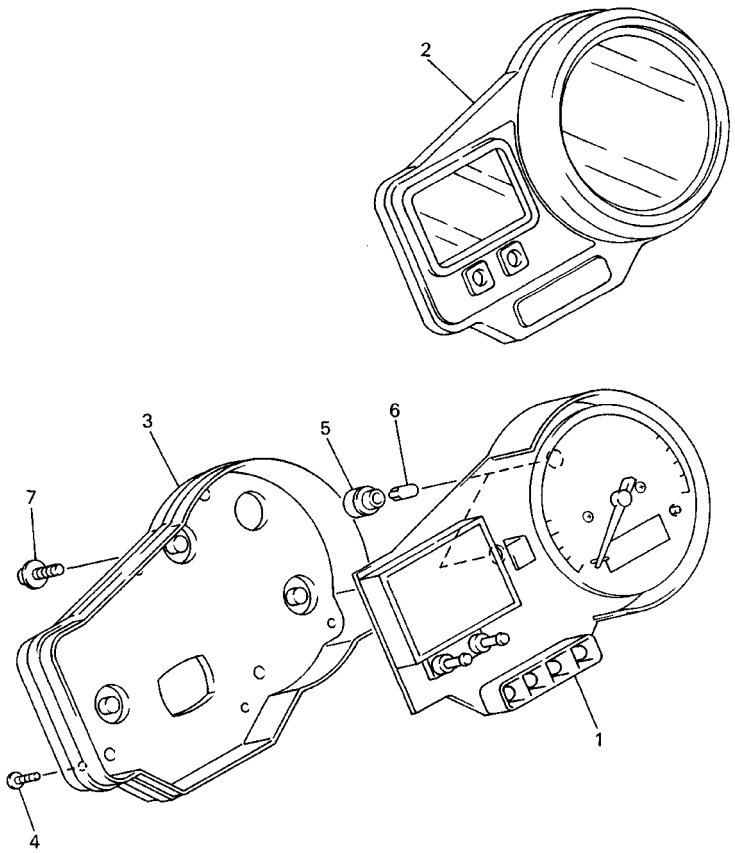

5EB3351-9410

REF. NO.	PART NO.	DESCRIPTION	5EB1	5EB2	5EB4			REMARKS
1	5EB–83570–00	SPEEDOMETER ASSY	1	1	1			UR
	5EB–83570–10	SPEEDOMETER ASSY	1					UR FOR GBR
2	4XV–8353E–00	CASE, METER UPPER	1	1	1			
3	4XV–83572–00	CASE, SPEEDOMETER LOWER	1	1	1			
4	97707–40020	SCREW, TAPPING	4	4	4			
5	4YR–83534–00	SOCKET, NEUTRAL	2	2	2			
6	4YR–83517–10	BULB (12V–2W T5)	2	2	2			
7	90164–05014	SCREW, TAPPING	3	3	3			

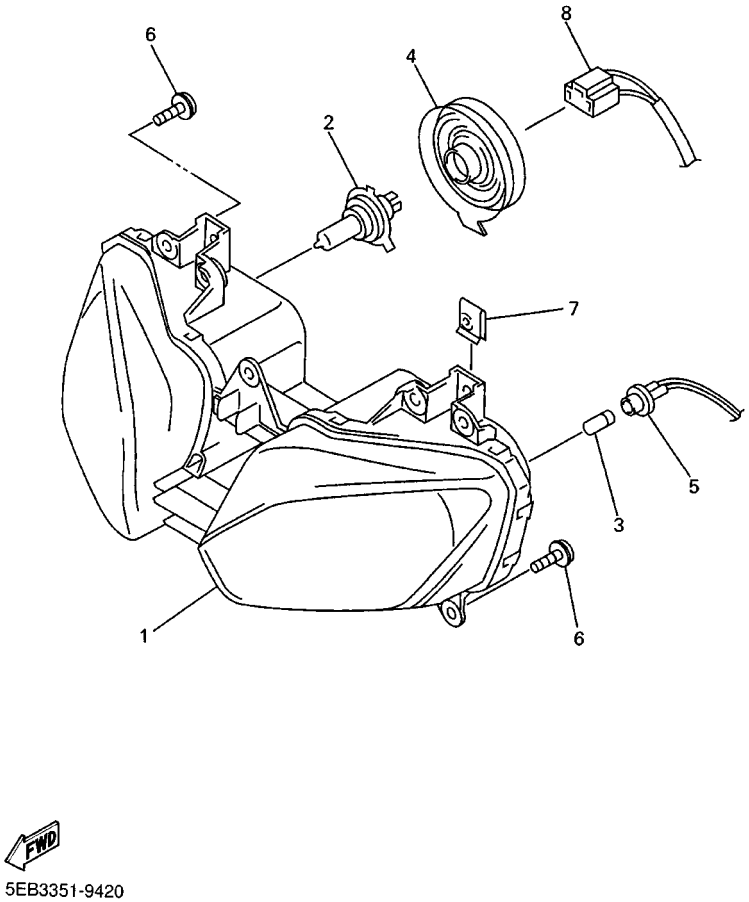

FIG. 42 HEADLIGHT

REF. NO.	PART NO.	DESCRIPTION	5EB1	5EB2	5EB4			REMARKS
1	5EB–84310–00	HEADLIGHT UNIT ASSY	1	1				UR
	5EB–84310–10	HEADLIGHT UNIT ASSY	1					UR FOR GBR
	5EB–84310–20	HEADLIGHT UNIT ASSY			1			
2	8V0–84314–00	BULB (12V–60/55W)	2	2	2			
3	4SV–84347–00	BULB (12V–5W)	2	2				
4	4SV–84397–00	COVER, SOCKET	2	2	2			
5	5EB–84312–00	HOLDER, SOCKET	2	2				
6	90164–05014	SCREW, TAPPING	4	4	4			
7	90183–05024	NUT, SPRING	2	2	2			
8	5EB–84359–00	CORD, HEADLIGHT	1	1				
	5EB–84359–10	CORD, HEADLIGHT			1			

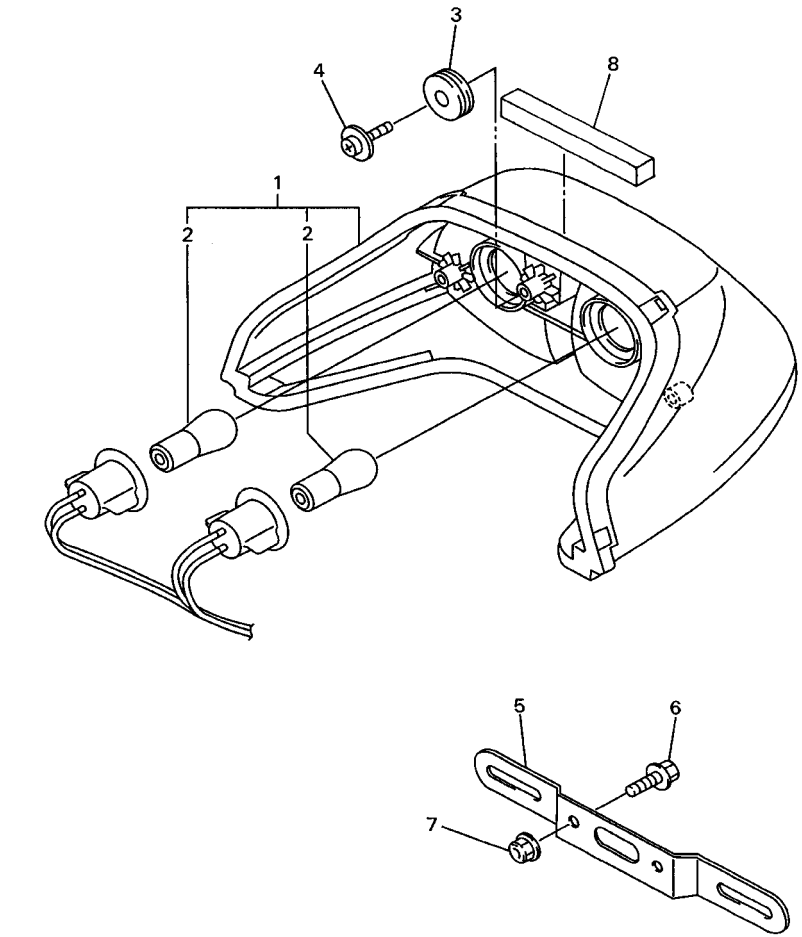

5EB3351-9431

FIG. 43 TAILLIGHT

REF. NO.	PART NO.	DESCRIPTION	5EB1	5EB2	5EB4			REMARKS
1	5EB–84710–00	TAILLIGHT UNIT ASSY	1	1	1			
2	1A2–84714–41	.BULB (12V–21/5W)	2	2	2			
3	90480–18276	GROMMET	3	3	3			
4	90164–05014	SCREW, TAPPING	3	3	3			
5	3YF–84751–00	BRACKET, LICENSE	1	1	1			
6	95027–06016	BOLT, FLANGE	2	2	2			
7	95607–06200	NUT, SELF U–FLANGE	2	2	2			
* 8	3VD–12465–00	DAMPER	1	1	1			

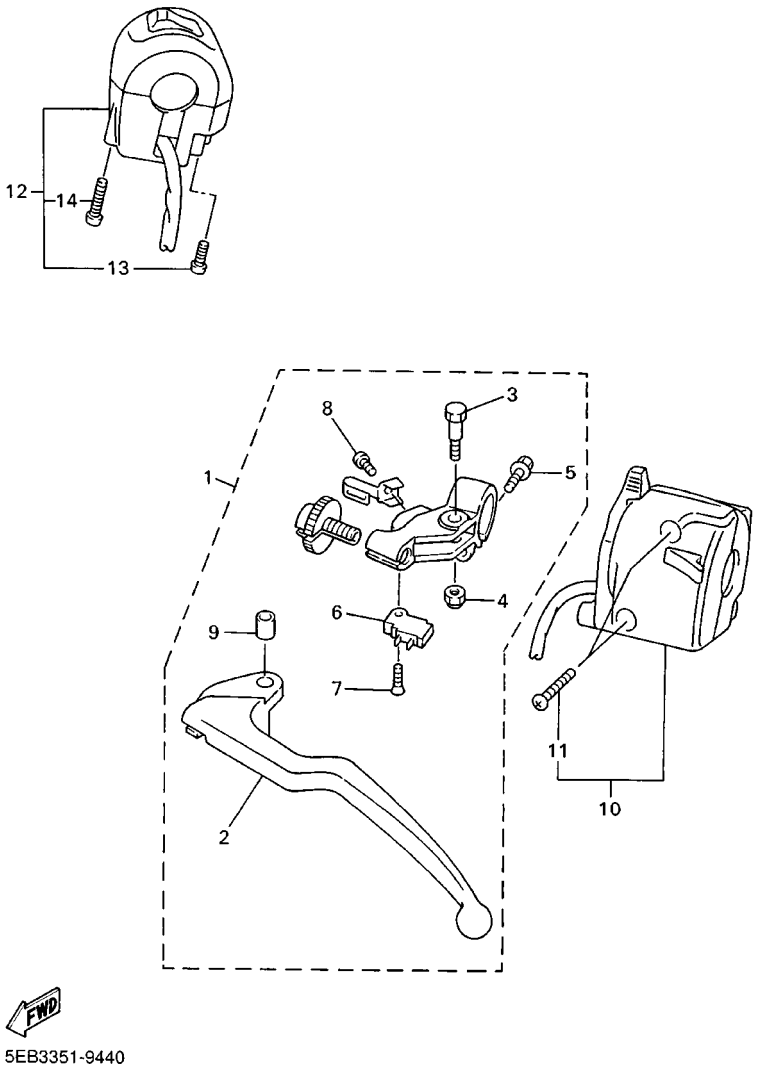

FIG. 44 HANDLE SWITCH. LEVER

REF. NO.	PART NO.	DESCRIPTION	5EB1	5EB2	5EB4			REMARKS
1	5EB–82910–01	LEVER HOLDER ASSY (LEFT)	1	1	1			
2	5EB–83912–01	.LEVER 1	1	1	1			
3	4XV–83945–00	.BOLT, LEVER	1	1	1			
4	95607–06100	.NUT, U	1	1	1			
5	95027–06020	.BOLT, FLANGE	1	1	1			
6	4XV–82917–00	.SWITCH	1	1	1			
7	98707–03016	.SCREW, FLAT HEAD	1	1	1			
8	98507–04010	.SCREW, PAN HEAD	1	1	1			
9	4XV–83913–00	.COLLAR, LEVER 1	1	1	1			
10	5EB–83972–00	SWITCH, HANDLE 4	1	1	1			
11	98507–05025	.SCREW, PAN HEAD	2	2	2			
12	5EB–83963–00	SWITCH, HANDLE 3 (RIGHT)	1	1				
	5EB–83975–00	SWITCH, HANDLE 2			1			
13	98507–05030	.SCREW, PAN HEAD	1	1	1			
14	98507–05050	.SCREW, PAN HEAD	1	1	1			

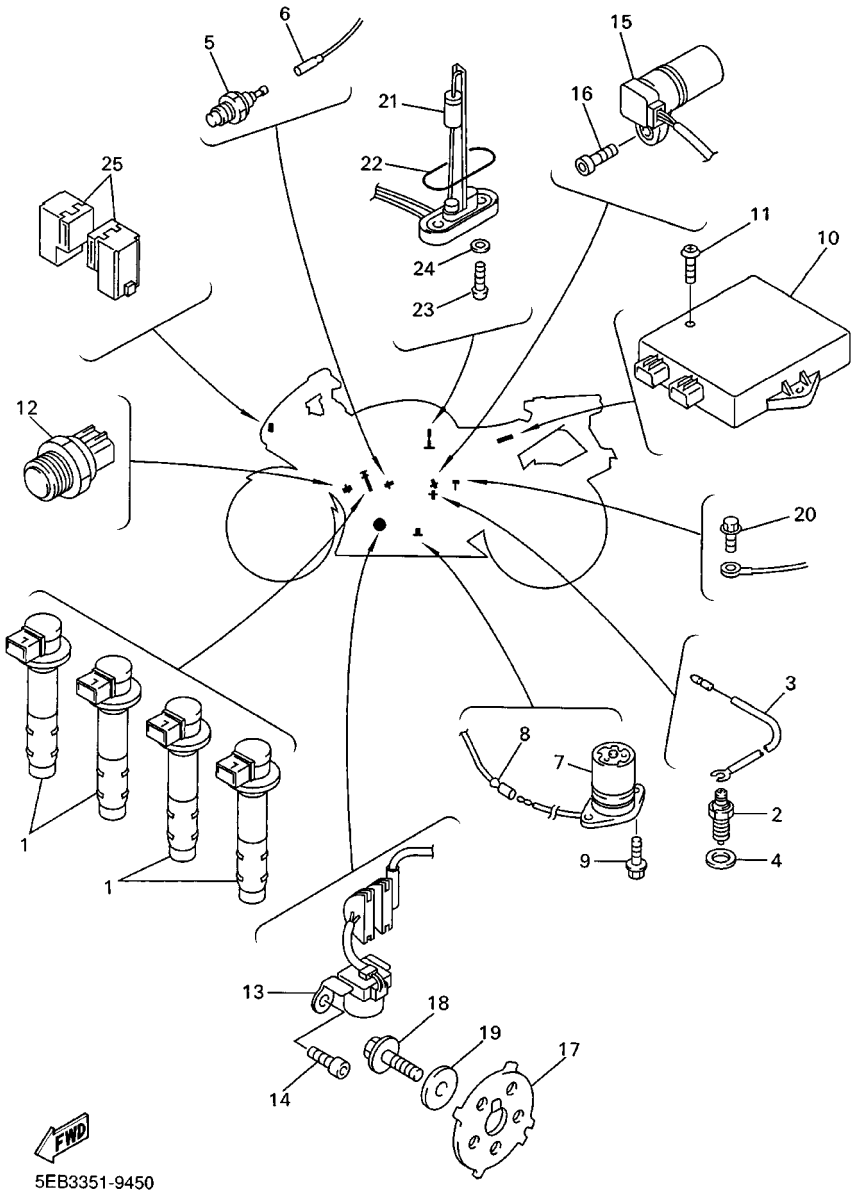

FIG. 45 ELECTRICAL 1

REF. NO.	PART NO.	DESCRIPTION	5EB1	5EB2	5EB4			REMARKS
1	5EB–82310–00	IGNITION COIL ASSY	4	4	4			
2	4KM–82540–00	NEUTRAL SWITCH ASSY	1	1	1			
3	5EB–82541–00	WIRE, LEAD	1	1	1			
4	90430–10148	GASKET	1	1	1			
5	11H–83591–00	THERMO UNIT	1	1	1			
6	5EB–82541–10	WIRE, LEAD	1	1	1			
7	5EB–85720–00	OIL LEVEL GAUGE ASSY	1	1	1			
8	5EB–82509–00	WIRE, SUB LEAD	1	1	1			
9	95027–06014	BOLT, FLANGE	2	2	2			
10	5EB–85540–00	C.D.I. UNIT ASSY	1		1			
	5EB–85540–10	C.D.I. UNIT ASSY		1				
11	97707–60025	SCREW, TAPPING	2	2	2			
12	5EB–82560–00	THERMO SWITCH ASSY	1	1	1			
13	5EB–81670–00	PICK–UP ASSY	1	1	1			
14	91317–06012	BOLT	2	2	2			
15	5EB–83755–00	SENSOR, SPEED	1	1	1			
16	91317–06016	BOLT	1	1	1			
17	5EB–81673–00	ROTOR	1	1	1			
18	90105–08386	BOLT, WASHER BASED	1	1	1			
19	90201–08753	WASHER, PLATE	1	1	1			
20	95027–06012	BOLT, FLANGE	1	1	1			
21	1UF–85752–02	SENDER UNIT ASSY, FUEL METER	1	1	1			
22	42X–85753–00	GASKET, SENDER UNIT	1	1	1			
23	90149–06008	SCREW	2	2	2			
24	90202–05193	WASHER, PLATE	2	2	2			
25	4XV–81950–00	RELAY ASSY	2	2	2			

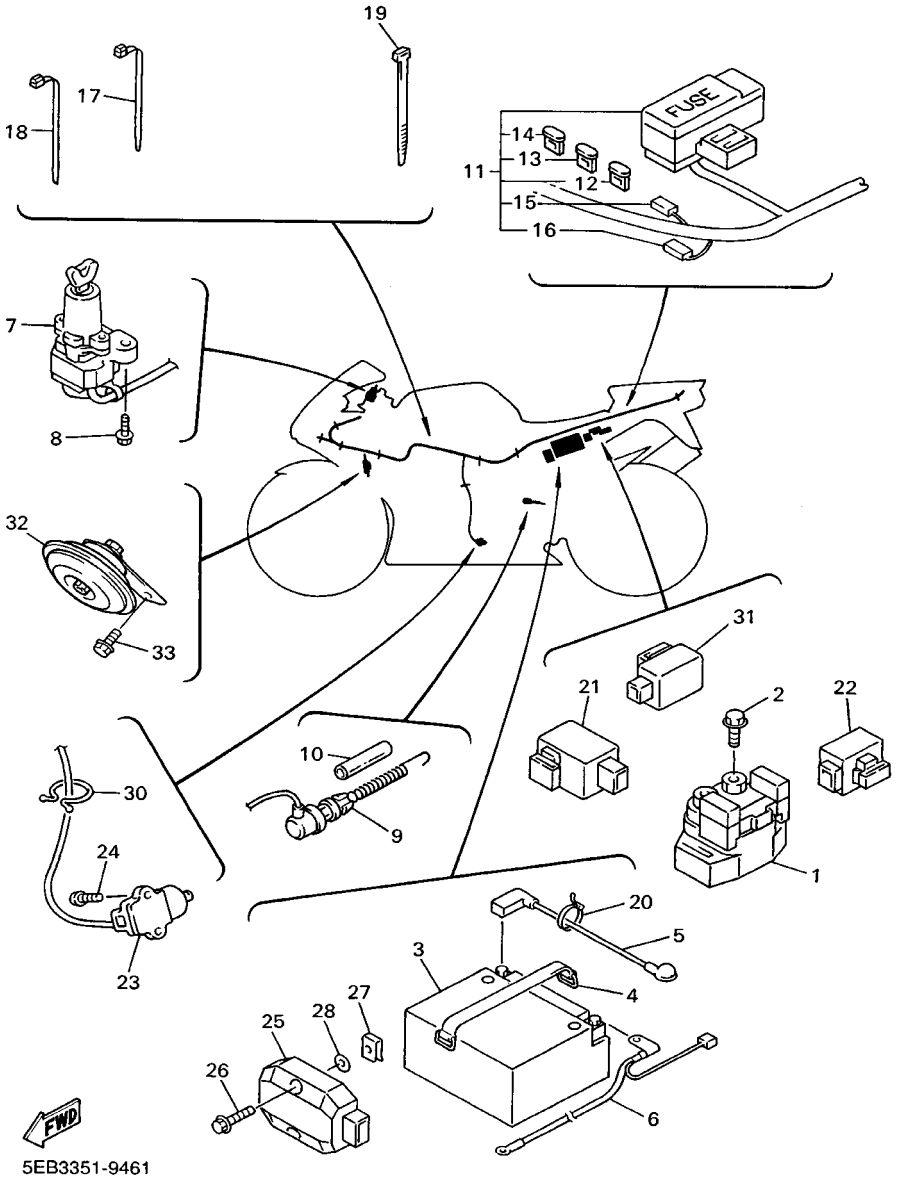

FIG. 46 ELECTRICAL 2

REF. NO.	PART NO.	DESCRIPTION	5EB1	5EB2	5EB4			REMARKS
1	4YR–81940–00	STARTER RELAY ASSY	1	1	1			
2	95027–06008	BOLT, FLANGE	2	2	2			
3	4TX–82100–01	BATTERY ASSY (GT12B–4)	1	1	1			
4	3L8–82131–01	BAND, BATTERY	1	1	1			
5	4XV–82115–00	WIRE, PLUS LEAD	1	1	1			
6	5EB–82116–00	WIRE, MINUS LEAD	1	1	1			
7	5EB–82501–00	MAIN SWITCH STEERING LOCK	1	1				
	5EB–82501–10	MAIN SWITCH STEERING LOCK			1			
8	90109–080G5	BOLT	2	2	2			
9	3XV–82530–01	STOP SWITCH ASSY	1	1	1			
10	90446–08001	HOSE	1	1	1			
11	5EB–82590–00	WIRE HARNESS ASSY	1	1				
	5EB–82590–10	WIRE HARNESS ASSY			1			
12	36Y–82151–00	.FUSE (15A–BL)	2	2	2			
13	2KW–82151–00	.FUSE (7.5A–BL)	3	3	3			
14	2GV–82151–00	.FUSE (20A–BL)	3	3	3			
15	4WA–81980–00	.DIODE ASSY	1	1	1			
16	3WP–81980–00	.DIODE ASSY	1	1	1			
*17	90464–12045	CLAMP	1	1	1			
18	90464–13073	CLAMP	4	4	4			
19	3MA–82591–00	BAND	2	2	2			
20	90464–13077	CLAMP	2	2	2			
21	5EB–81950–00	RELAY ASSY	1	1	1			
22	5EB–81950–10	RELAY ASSY	1	1	1			
23	3LD–82566–70	SWITCH, SIDE STAND	1	1	1			
*24	90157–05001	SCREW, PAN HEAD	2	2	2			
25	4JH–81960–01	RECTIFIER & REGULATOR ASSY	1	1	1			

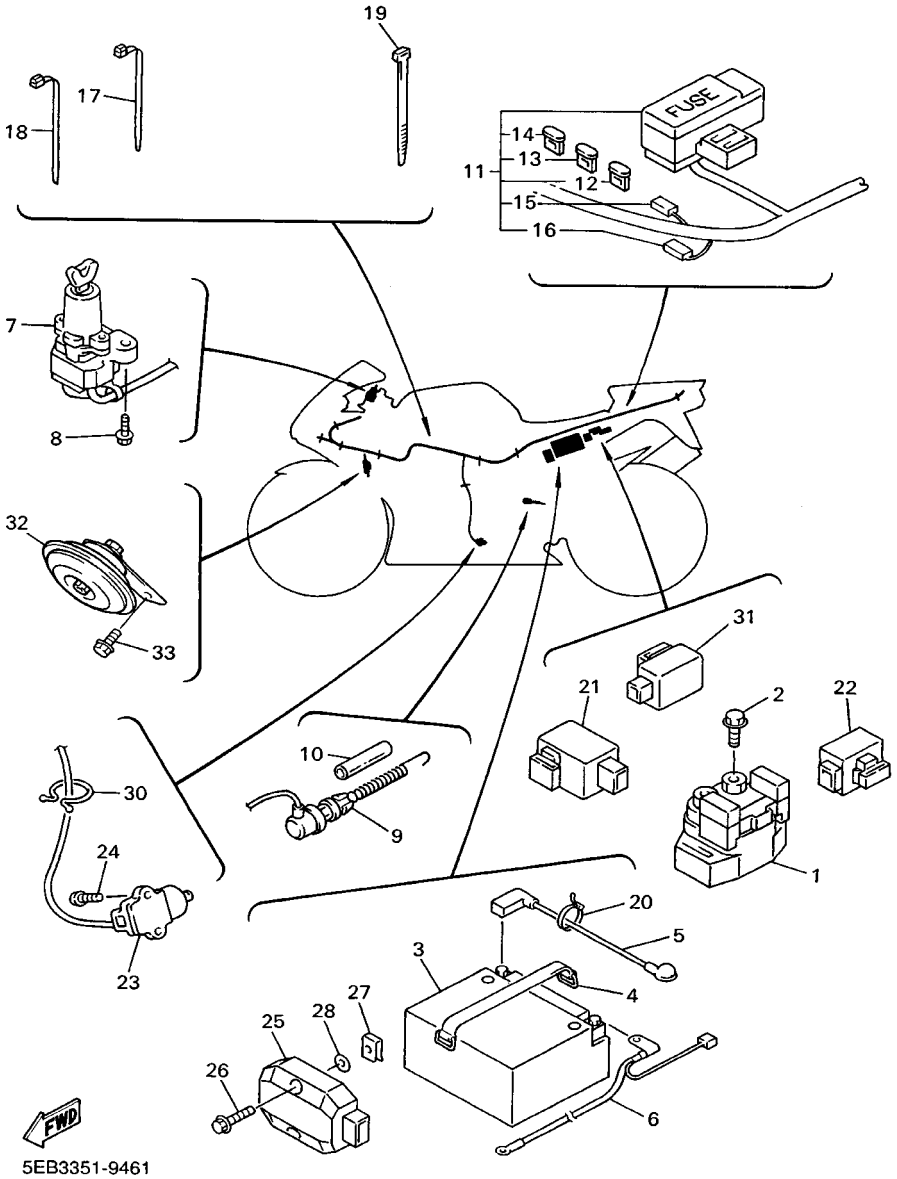

FIG. 46 ELECTRICAL 2

REF. NO.	PART NO.	DESCRIPTION	5EB1	5EB2	5EB4			REMARKS
26	95827–06025	BOLT, FLANGE	2	2	2			
27	90183–06053	NUT, SPRING	2	2	2			
28	90202–05187	WASHER, PLATE	2	2	2			
*29								
30	90465–18147	CLAMP	1	1	1			
31	4MY–83350–01	FLASHER RELAY ASSY	1	1	1			
32	4TH–83371–00	HORN	1	1	1			
33	95807–06010	BOLT, FLANGE	1	1	1			

NUMERICAL INDEX

PART NO.	GRID NO.
4SV–W0041–00	E – 8
3TU–W0042–51	E – 13
4SV–W0045–00	E – 3
5EB–W0046–00	E – 6
3GM–W0047–10	E – 3
3MA–W0047–10	E – 3
4JG–W0047–00	E – 6
1J3–W0048–00	E – 3
51L–W0048–00	E – 6
4JG–W0057–00	E – 6
4SV–W0057–00	E – 3
4SV–W0057–10	E – 3
2TV–W2470–00	D – 15
5EB–W2587–00	E – 8
5EB–Y2171–00–P0	D – 5
5EB–Y2171–10–P1	D – 5
5EB–Y2171–20–4B	D – 5
5EB–Y2410–30–01	D – 12
5EB–Y2410–30–02	D – 12
5EB–Y2410–30–03	D – 12
5EB–Y2808–00–P0	F – 4
5EB–Y2808–10–P1	F – 4
5EB–Y2808–20–4B	F – 4
5EB–Y2809–00–P0	F – 4
5EB–Y2809–10–P1	F – 4
5EB–Y2809–20–4B	F – 4
5EB–Y283G–00–0X	E – 15
5EB–Y283G–10–P0	E – 15
5EB–Y283G–20–P1	E – 15
5EB–Y283U–00–P0	F – 3
5EB–Y283U–20–P1	F – 3
5EB–Y283U–20–P2	F – 3
5EB–Y283V–00–P0	F – 3
5EB–Y283V–20–P1	F – 3
5EB–Y283V–20–P2	F – 3
5EB–11101–00	B – 2
4KG–1111G–00	B – 2
5EB–11133–10	B – 2
5EB–11145–00	C – 5
5EB–11165–01	C – 5
5EB–11181–00	B – 2
5EB–11191–00	B – 2
5EB–11193–00	B – 2
5EB–11195–00	B – 2
214–11198–01	B – 11
5EB–11411–00	B – 3
5EB–11416–A0	B – 3
5EB–11416–00	B – 3
5EB–11416–10	B – 3
5EB–11416–20	B – 3
5EB–11416–30	B – 3
5EB–11603–00	B – 3
5EB–11631–00	B – 3
5EB–11633–00	B – 3
5EB–11650–00	B – 3
5EB–11654–00	B – 3
4TV–11656–00	B – 3
4TV–11656–10	B – 3
4TV–11656–20	B – 3
4TV–11656–30	B – 3
5EB–12111–00	B – 4
5EB–12113–00	B – 4
5EB–12114–00	B – 4
5EB–12116–00	B – 4
5EB–12117–00	B – 4
1HX–12118–00	B – 4
4TV–12119–00	B – 4
5EB–12121–00	B – 4
5EB–12124–01	B – 4
5EB–12126–00	B – 4
5EB–12127–00	B – 4
5EB–12153–09	B – 5
5EB–12153–20	B – 5
1HX–12168–A0	B – 4
1HX–12168–F0	B – 4
1HX–12168–H1	B – 4
1HX–12168–K1	B – 4
1HX–12168–M1	B – 4
1HX–12168–R1	B – 4
1HX–12168–U1	B – 4
1HX–12168–W1	B – 4
1HX–12168–Y1	B – 4
1HX–12168–00	B – 4
1HX–12168–20	B – 4
1HX–12168–40	B – 4
1HX–12168–60	B – 4
1HX–12168–80	B – 4
1HX–12169–E0	B – 5
1HX–12169–G0	B – 5
1HX–12169–J0	B – 5
1HX–12169–L0	B – 5
1HX–12169–N0	B – 5
1HX–12169–T0	B – 5
1HX–12169–11	B – 4
1HX–12169–31	B – 4
1HX–12169–50	B – 5
1HX–12169–70	B – 5
1HX–12169–90	B – 5
5EB–12171–00	B – 6
5EB–12176–00	B – 6
5EB–12181–00	B – 6
4XV–12210–00	B – 6
4FM–12213–00	B – 6
5BE–12241–00	B – 6
5EB–12251–00	B – 6
5EB–12252–00	B – 6
4SV–1240G–00	B – 7
5EB–12405–00	B – 9
5EB–12410–00	B – 9
5EB–12413–00	B – 9
5EB–12421–00	B – 7
5EB–12422–00	B – 7
5EB–1243A–00	B – 7
5EB–1243E–00	B – 7
5EB–1243F–00	B – 7
11H–12438–00	B – 7
5EB–12439–00	B – 7
5EB–1244E–00	B – 9
5EB–1244G–00	B – 8
5EB–12446–00	C – 3
5EB–12450–00	B – 7
3XV–1246A–10	B – 9
5EB–12461–00	B – 9
4JH–12462–00	B – 9
5EB–12469–00	B – 7
4TV–12486–00	C – 3
5Y9–12491–00	E – 13
5EB–12498–00	B – 9
5EB–12551–00	B – 8
5EB–12552–00	B – 8
5EB–12576–00	C – 3
5EB–12577–00	B – 7
5EB–12578–00	B – 9
4NK–12579–00	B – 7
5EB–12579–00	B – 9
4TV–12581–00	B – 8
5EB–12581–00	B – 7
5EB–12588–00	B – 9
5EB–12589–00	B – 9
5EB–12659–00	B – 9
5EB–12668–00	B – 9
5EB–12682–00	D – 2
5EB–12822–00	B – 11
5EB–1316E–00	B – 10
5EB–13161–00	B – 10
5EB–13300–00	B – 10
5EB–13327–00	B – 10
5EB–13411–00	B – 10
5EB–13412–00	B – 10
5EB–13414–00	B – 11
5EB–13415–00	B – 10
5EB–13416–00	B – 10
5EB–13417–00	B – 11
5EB–13418–00	C – 5
3FV–13440–00	B – 11
5EB–13470–00	B – 11
4JH–13473–00	B – 11
5EB–13475–00	B – 11
3KS–13490–00	B – 11
4TV–13575–00	F – 2
5EB–13581–01	B – 13
5EB–13586–00	B – 12
5EB–13898–00	B – 10
5EB–13907–00	D – 13
4JH–13918–00	C – 2
4YR–1410A–00	C – 2
5EB–14105–00	B – 15
5EB–14107–00	B – 15
5EB–14121–00	C – 2
4JH–14133–00	C – 2
4YR–14133–00	C – 2
4JH–14137–00	C – 2
5EB–1414G–00	B – 15
5EB–14148–00	B – 13
5EB–14162–00	C – 2
3TJ–14191–40	C – 2
5EB–14197–00	B – 13
	C – 2
3TJ–14216–40	C – 3
4JH–14216–00	B – 15
4TV–14216–00	C – 3
4TV–14226–00	B – 13
5EB–14244–00	B – 15
3TJ–14245–40	C – 2
5EB–14251–00	C – 3
4JH–14264–00	C – 2
5EB–14294–00	D – 13
5EB–14298–00	C – 2
4TV–14348–00	B – 13
5EB–14348–00	B – 12
5EB–14349–00	B – 12
4JH–14350–00	C – 2
4JH–14358–00	C – 2
5EB–1440F–00	C – 2
5EB–1441L–00	B – 12
5EB–14411–00	B – 12
5EB–14413–00	B – 12
5EB–14419–01	B – 13
5EB–14421–00	B – 12
5EB–1443J–00	B – 13
5EB–1444J–01	B – 13
5EB–14451–00	B – 12
5EB–14452–00	B – 12
5EB–14453–00	B – 12
5EB–14454–00	C – 3
5EB–14458–00	B – 12
5EB–1446F–00	F – 2
5EB–1446R–00	B – 12
5EB–14462–00	B – 12
5EB–14466–00	B – 13
4X7–14467–01	B – 13
5EB–14472–00	B – 12
5EB–14477–00	B – 12
5EB–14485–00	B – 13
4JH–14487–00	C – 2
4JH–14515–00	B – 15
4TV–14534–00	C – 3
676–14548–00	C – 2
7A9–14555–00	C – 2
4TV–14557–00	C – 3
4TV–14562–00	C – 3
4JH–14565–00	C – 2
688–14592–00	C – 2
5EB–14602–00	C – 4
3YF–14613–01	C – 4
5EB–14710–00	C – 4
5EB–14714–00	C – 4
5EB–14733–00	D – 4
5EB–14900–00	B – 15
5EB–14900–10	B – 15
5EB–14901–00	B – 15
5EB–14901–10	B – 15
5EB–14902–00	B – 15
5EB–14902–10	B – 15
5EB–14903–00	B – 15
5EB–14903–10	B – 15
5EB–14904–00	B – 15
5EB–14904–10	B – 15
5EB–14916–00	B – 15
5EB–14916–10	B – 15
5EB–14922–00	C – 2
5EB–14933–00	B – 15
4JH–14934–00	C – 2
5EB–14935–00	C – 2
5EB–14936–00	B – 15
5EB–14940–00	B – 15
3TJ–14943–87	B – 15
3TJ–14943–88	B – 15
5EB–14948–02	B – 15
5EB–14958–00	B – 15
5EB–14984–00	C – 2
5EB–14985–00	C – 2
5EB–15100–00	C – 5
11H–15138–00	B – 2
5EB–15163–00	C – 11
36Y–15189–00	C – 6
5EB–15189–00	C – 5
5EB–15316–00	C – 6
3KJ–15337–00	C – 15
3F9–15362–00	C – 7
5EB–15362–00	C – 6
5EB–15371–00	C – 5
5EB–15373–00	C – 5
5EB–15393–00	C – 5
5EB–1541A–00	C – 8
5EB–15411–00	C – 7
5EB–15416–00	C – 7
5EB–15418–00	C – 7
5EB–15421–01	C – 7
5EB–15425–00	C – 7
5EB–15441–00	C – 8
5EB–15451–00	C – 7
5EB–15456–00	C – 7
5EB–15461–00	C – 7
5EB–15463–00	C – 8
5EB–15484–00	C – 7
5EB–15512–00	C – 9
5EB–15515–00	C – 9
5EB–15521–00	C – 9
5BP–15590–00	C – 9
5EB–16150–00	C – 10
5EB–16154–00	C – 10
1AE–16164–00	C – 10
4FN–16321–00	C – 10
168–16324–00	C – 10
3J2–16324–00	C – 10
5EB–16340–00	C – 10
132–16346–00	C – 14

NUMERICAL INDEX

PART NO.	GRID NO.
5EB–16351–01	C – 10
5EB–16356–01	C – 10
5EB–16371–00	C – 10
5EB–16382–00	C – 10
5EB–17121–00	C – 11
5EB–17131–00	C – 11
5EB–17151–00	C – 11
5EB–17161–00	C – 11
5EB–17211–00	C – 12
5EB–17221–00	C – 11
5EB–17231–00	C – 12
5EB–17241–00	C – 11
5EB–17251–00	C – 12
5EB–17261–00	C – 11
5EB–17411–00	C – 11
5EB–17421–00	C – 11
278–17424–01	C – 12
2GH–17460–00	C – 12
5EB–18101–01	C – 14
5EB–18110–00	C – 14
5EB–18112–01	C – 14
5EB–18113–00	C – 14
5EB–18115–00	C – 14
3TC–18116–00	C – 14
4XV–18127–00	C – 14
4XV–18140–00	C – 14
2H9–18154–00	C – 14
4XV–18154–00	C – 14
5EB–18511–00	C – 13
5EB–18512–00	C – 13
5EB–18513–00	C – 13
4XV–18531–00	C – 13
5EB–18536–00	C – 13
5EB–18540–00	C – 13
136–18542–00	C – 13
5EB–21110–00	C – 15
5EB–2117E–00	D – 3
4XV–2117K–00	D – 15
5EB–2117M–00	C – 15
5EB–2117V–00	C – 15
5EB–2117W–00	C – 15
5EB–21190–00	C – 15
4XV–21376–00	D – 3
5EB–2144G–00	E – 13
5EB–21446–00	D – 7
5EB–21495–00	C – 15
5EB–21511–00–P0	D – 3
5EB–21511–00–P1	D – 3

PART NO.	GRID NO.
5EB–21511–00–4B	D – 3
4TV–2153A–00	D – 12
4TV–2153A–10	D – 12
4TV–2153A–20	D – 12
4XV–2153E–00	F – 4
4XV–2153E–20	F – 4
5EB–21611–00	D – 3
5EB–21611–10	D – 3
30X–21621–00	D – 7
5EB–21621–00	D – 3
36Y–21639–00	C – 15
4XV–21639–00	D – 3
51Y–21639–00	E – 15
5EB–21650–00	D – 7
5EB–21654–00	D – 3
5EB–2172W–00	D – 5
5EB–2173L–00	D – 5
5EB–2173L–10	D – 5
3TU–2178A–00	E – 15
5EB–21781–00	D – 5
26H–21828–00	D – 5
5EB–21871–00	D – 5
5EB–21875–00	D – 5
5EB–22110–00	D – 6
5EB–22123–00	D – 6
5EB–22125–00	D – 6
5EB–22127–00	D – 6
3FV–22128–00	D – 6
4FN–22141–00	D – 6
5EB–22151–00	D – 6
5EB–2217A–00	D – 6
5EB–2217M–00	D – 6
5EB–22184–00	D – 6
5EB–22210–00	D – 8
5EB–22311–00	D – 6
5EB–23102–00	D – 10
5EB–23103–00	D – 10
5EB–23110–00	D – 10
4KG–23111–10	D – 10
	D – 11
4GY–23118–10	D – 10
	D – 11
4KM–23123–01	D – 11
5EB–23125–00	D – 10
5EB–23126–00	D – 10
5EB–23136–00	D – 10
5EB–23141–00	D – 10
	D – 11

PART NO.	GRID NO.
4PU–23144–00	D – 10
	D – 11
4PU–23145–00	D – 10
	D – 11
4V4–23146–L0	D – 10
	D – 11
3LR–23149–00	D – 10
	D – 11
3TJ–23149–10	D – 10
	D – 11
4V4–23153–L0	D – 10
	D – 11
2K8–23158–L0	D – 10
	D – 11
5EB–23170–00	D – 10
5EB–23171–00	D – 10
5EB–23173–00	D – 10
	D – 11
3LC–23181–00	D – 10
	D – 11
4V4–23188–L0	D – 10
	D – 11
4PU–2331G–00	D – 11
5EB–2332K–00	D – 10
	D – 11
5EB–23340–00	D – 11
3LC–23357–00	D – 10
	D – 11
5EB–23377–00	D – 9
4XV–2341B–00	D – 9
4XV–23415–00	D – 9
4XV–23418–00	D – 9
5EB–23435–01	D – 9
3FV–23462–00	D – 9
2H9–23469–00	E – 7
5EB–23818–00	D – 9
5EB–2411J–00	D – 13
5EB–2414H–00	D – 13
1LJ–2414J–00	D – 3
5EB–2414J–00	D – 13
5EB–2414K–00	D – 13
5EB–2417H–00	D – 13
4FM–24181–00	C – 4
5EB–24181–00	D – 12
5EB–24182–00	D – 12
2GH–24183–00	D – 12
5EB–24183–00	D – 12
27V–24184–00	F – 2

PART NO.	GRID NO.
2GH–24186–00	D – 12
5EB–24191–00	D – 12
5EB–24240–00	D – 12
5EB–24240–10	D – 12
5EB–24250–00	D – 12
5EB–24311–00	D – 13
5EB–24312–00	D – 13
1AE–24366–00	D – 13
5EB–24491–00	D – 13
4TV–24500–00	D – 12
4X8–24512–00	D – 12
3LN–24515–00	B – 13
3XV–24523–00	D – 12
3XV–24534–00	D – 12
4TV–24560–00	D – 13
4HM–24602–00	D – 13
5EB–2470F–00	D – 15
5EB–24710–00	D – 15
4HM–24728–00	D – 15
5EB–24728–00	D – 15
5EB–24734–00	D – 15
5EB–24750–00	D – 15
5EB–24751–00	D – 15
5EB–2478E–00	D – 15
4BP–24780–00	D – 15
4XV–24792–00	D – 15
4XV–25117–00	E – 2
4XV–25168–00–33	E – 2
4XV–25168–00–35	E – 2
4XV–25181–00	E – 2
4XV–25317–00	E – 4
5EB–25338–00–33	E – 4
5EB–25338–00–35	E – 4
5EB–25364–01	E – 4
5EB–25366–01	E – 4
5EB–25376–00	E – 4
5EB–25377–00	E – 4
4XV–25381–00	E – 5
4XV–25383–00	E – 4
5EB–25388–00	E – 4
5EB–25389–00	E – 4
29L–25398–00	E – 2
	E – 4
29L–25398–10	E – 2
	E – 4
29L–25398–20	E – 2
	E – 4
5EB–25448–20	E – 4

PART NO.	GRID NO.
5DM–2580T–00	E – 3
5DM–2580U–00	E – 3
5EB–2580W–00	E – 6
4SV–2581T–00	E – 3
3LN–2582A–00	E – 13
5EB–2582F–00	E – 8
5EB–2582W–00	E – 6
5CG–25828–C0	E – 6
5EB–25828–00	E – 6
3TU–2583V–01	E – 13
3LN–2585F–00	E – 13
3LN–2585H–00	E – 13
2KF–25852–50	E – 13
3GM–25852–50	E – 8
3FV–25854–00	E – 8
360–25854–01	E – 13
2GU–25855–00	E – 13
2J2–25855–50	E – 8
2VN–25866–00	E – 8
56A–25867–00	E – 8
5EB–25872–00	E – 8
5EB–25873–00	E – 8
5EB–25874–00	E – 14
3EN–25875–01	E – 9
2R8–25876–01	E – 9
5EB–25886–01	E – 14
5EB–25887–00	E – 14
3FV–2589A–00	E – 8
3FV–2589F–00	E – 8
3FV–2589G–00	E – 8
3GM–2589H–00	E – 8
3FV–25894–00	E – 8
31A–25894–01	E – 13
5EB–25895–00	E – 14
4TT–25914–00	E – 6
4SV–25919–00	E – 3
4TT–25919–00	E – 6
4SV–25924–00	E – 3
3GM–25925–00	E – 3
4TT–25937–00	E – 6
5EB–26121–00	E – 7
5EB–26122–00	E – 7
5EB–26132–00	D – 2
5EB–26240–00	E – 7
4YR–26241–01	E – 7
5EB–26246–00	E – 7
4YR–26280–01	F – 2
4YR–26290–01	F – 2

PART NO.	GRID NO.
5EB–26292–01	E – 8
5EB–26298–01	F – 2
5EB–26311–00	E – 7
5EB–26312–00	E – 7
5EB–26331–00	E – 7
5EB–26332–00	E – 8
5EB–26335–00	E – 7
128–27114–00	E – 10
5EB–27211–00	E – 13
4XV–27222–00	E – 13
5EB–27311–00	E – 10
36Y–27315–00	E – 10
4NX–27315–00	E – 10
4NX–27321–00	E – 10
1TX–27351–00	E – 10
4NX–27351–00	E – 10
5EB–27352–00	E – 10
5EB–27410–00	E – 10
5EB–27420–00	E – 11
36Y–27424–00	E – 12
5EB–27430–00	E – 11
4BP–27434–01	E – 10
1HX–27437–00	E – 11
5EB–27440–00	E – 11
5EB–27442–00	E – 10
5EB–27443–00	E – 11
5EB–27445–00	E – 11
5EB–27446–00	E – 11
5EB–27813–00	E – 13
5EB–28100–00	D – 4
4FM–28215–00	E – 15
5EB–28301–00	F – 3
5EB–28301–10	F – 3
5EB–28303–00	F – 3
5EB–28303–10	F – 3
5EB–28304–00	F – 3
5EB–28305–00	F – 3
5EB–28315–00	E – 15
5EB–28315–10	E – 15
5EB–28315–20	E – 15
5EB–28328–00	F – 4
5EB–28328–10	F – 4
5EB–28338–00	F – 3
1AE–2834E–00	D – 3
5EB–2834E–00	F – 4
5EB–2834F–00	F – 4
5EB–2834V–00	F – 2
5EB–28342–01	F – 2

NUMERICAL INDEX

PART NO.	GRID NO.
5EB–28356–01	E – 15
5EB–2836A–00	F – 5
5EB–2836E–00	F – 5
5EB–2836K–00	F – 4
5EB–2836L–00	F – 4
5EB–2836M–00	F – 5
5EB–2837J–00	F – 2
5EB–2837L–00	E – 15
5EB–2837M–00	E – 15
5EB–2837N–00	F – 2
5EB–28371–00	F – 2
5EB–2838G–00	F – 4
5EB–2838R–00	F – 2
5EB–2838T–00	F – 2
5EB–28381–00	E – 15
5EB–28381–10	E – 15
5EB–2839H–00	F – 3
5EB–2839H–10	F – 3
5EB–28415–00	F – 3
5EB–28415–10	F – 3
5EB–28416–00	F – 3
5EB–28416–10	F – 3
8U9–77268–00	F – 4
5EB–81410–00	F – 6
5EB–81450–00	F – 6
5EB–81670–00	F – 13
5EB–81673–00	F – 13
4WP–81801–00	F – 7
4XV–81815–00	F – 7
4XV–8182A–00	F – 7
4WP–81826–00	F – 7
4WP–81844–00	F – 7
1FK–81847–00	F – 7
5EB–81890–00	F – 7
4YR–81940–00	F – 14
4XV–81950–00	F – 13
5EB–81950–00	F – 14
5EB–81950–10	F – 14
4JH–81960–01	F – 14
3WP–81980–00	F – 14
4WA–81980–00	F – 14
4TX–82100–01	F – 14
4XV–82115–00	F – 14
5EB–82116–00	F – 14
3L8–82131–01	F – 14
2GV–82151–00	F – 14
2KW–82151–00	F – 14
36Y–82151–00	F – 14

PART NO.	GRID NO.
5EB–82310–00	F – 13
5EB–82501–00	F – 14
5EB–82501–10	F – 14
5EB–82509–00	F – 13
3XV–82530–01	F – 14
4KM–82540–00	F – 13
5EB–82541–00	F – 13
5EB–82541–10	F – 13
5EB–82560–00	F – 13
3LD–82566–70	F – 14
5EB–82590–00	F – 14
5EB–82590–10	F – 14
1UA–82591–00	E – 7
3MA–82591–00	D – 9
	F – 14
5EB–82910–01	F – 12
4XV–82917–00	F – 12
4JH–83310–01	F – 8
306–83311–40	F – 8
4JH–83318–00	F – 8
4JH–83320–01	F – 8
4JH–83330–00	F – 8
4JH–83332–00	F – 8
4JH–83340–00	F – 8
4JH–83342–00	F – 8
4FM–83345–00	F – 8
4MY–83350–01	F – 15
4FM–83369–00	F – 8
4TH–83371–00	F – 15
4XV–83513–00	E – 15
4YR–83517–10	F – 9
4XV–8353E–00	F – 9
4YR–83534–00	F – 9
5EB–83570–00	F – 9
5EB–83570–10	F – 9
4XV–83572–00	F – 9
11H–83591–00	F – 13
5EB–83755–00	F – 13
5EB–83912–01	F – 12
4XV–83913–00	F – 12
5EB–83922–00	E – 8
4XV–83945–00	F – 12
5EB–83963–00	F – 12
5EB–83972–00	F – 12
5EB–83975–00	F – 12
3FV–83980–00	E – 8
5EB–84310–00	F – 10
5EB–84310–10	F – 10

PART NO.	GRID NO.
5EB–84310–20	F – 10
5EB–84312–00	F – 10
8V0–84314–00	F – 10
4SV–84347–00	F – 10
5EB–84359–00	F – 10
5EB–84359–10	F – 10
4SV–84397–00	F – 10
5EB–84710–00	F – 11
1A2–84714–41	F – 11
3YF–84751–00	F – 11
3Y6–85130–02	D – 4
4XV–85132–00	D – 3
5EB–85540–00	F – 13
5EB–85540–10	F – 13
5EB–85720–00	F – 13
1UF–85752–02	F – 13
42X–85753–00	F – 13
4TV–85885–00	C – 3
90101–08662	E – 10
90101–08766	E – 5
90101–10709	D – 6
90105–06006	C – 5
90105–063A3	D – 3
90105–067A6	B – 2
90105–06718	E – 14
90105–07342	B – 6
90105–08386	E – 6
	F – 13
90105–086A9	C – 5
90105–087A0	C – 5
90105–08776	C – 5
90105–10042	C – 15
90105–10271	E – 12
90105–10323	D – 6
90105–105A7	E – 3
90105–106A2	C – 15
90105–107A1	B – 2
90105–12004	C – 15
90105–126A8	F – 6
90109–064G6	E – 3
	E – 6
90109–065G3	C – 5
90109–066F0	B – 2
90109–080G5	F – 14
90109–083E2	E – 10
	E – 11
90109–085G6	E – 10
	E – 11

PART NO.	GRID NO.
90109–103A9	E – 10
	E – 11
90109–105G7	E – 10
90110–05112	D – 13
90110–06001	B – 10
90110–06091	C – 5
90110–06149	B – 7
90110–06225	B – 11
90110–06226	B – 10
	C – 5
	C – 13
	E – 10
90110–06258	D – 15
90111–06003	E – 11
90111–10018	C – 15
90116–10485	E – 4
90119–06007	D – 3
90119–06052	D – 7
90119–06096	D – 13
90119–06117	D – 5
	D – 9
90119–06172	B – 13
90119–06227	D – 3
	D – 6
90149–04278	D – 3
	D – 4
90149–05273	E – 15
90149–06001	C – 5
90149–06008	D – 12
	F – 13
90149–06285	C – 11
90149–06302	D – 12
90149–06308	D – 15
90149–08329	C – 9
90150–05023	E – 15
90150–05039	D – 5
	F – 2
	F – 3
	F – 5
90150–06036	D – 5
	F – 4
	F – 5
90154–05005	E – 15
90154–05059	C – 15
	D – 3
90154–06061	D – 3
90157–05079	F – 14
90159–05028	B – 13

PART NO.	GRID NO.
90159–06002	C – 10
90159–06085	E – 13
90159–06150	E – 13
90164–05014	F – 9
	F – 10
	F – 11
90170–08358	C – 14
90170–20327	C – 10
90176–05054	D – 4
90176–06055	F – 2
90176–28083	D – 9
90179–05523	E – 15
	F – 2
90179–06635	D – 15
90179–07652	B – 3
90179–08410	C – 4
90179–10696	C – 15
90179–18020	C – 12
90179–30691	D – 9
90183–05024	F – 2
	F – 3
	F – 4
	F – 5
	F – 10
90183–05061	D – 3
	D – 5
90183–05074	E – 15
90183–06053	E – 14
	F – 15
90185–18104	D – 6
90185–24165	E – 5
90201–04018	D – 4
90201–06008	D – 15
90201–06042	E – 10
	E – 11
90201–06050	D – 12
90201–06071	B – 9
90201–081R9	E – 10
90201–08326	E – 10
90201–086J0	E – 7
90201–087K3	C – 5
90201–08753	F – 13
90201–08759	D – 8
90201–101J1	D – 6
	E – 10
90201–10118	E – 9
	E – 14
90201–10614	C – 10

PART NO.	GRID NO.
90201–10669	E – 12
90201–12008	F – 6
90201–12013	C – 14
90201–146F9	E – 10
90201–154E8	C – 14
90201–177G4	C – 14
90201–186M4	D – 6
90201–20278	C – 12
90201–255A6	C – 10
90201–257R5	E – 5
90201–281U8	D – 9
90202–05187	F – 15
90202–05188	D – 4
90202–05193	D – 13
	F – 13
90202–06056	C – 2
90202–30235	D – 9
90206–12074	C – 14
90206–17084	E – 13
90209–21332	C – 11
90209–21351	C – 11
90209–22352	C – 11
90209–25342	C – 11
90209–25349	C – 11
90209–25350	C – 11
90215–20231	C – 10
90215–21022	C – 12
90240–10143	D – 8
90243–08029	E – 10
	E – 11
90269–07076	C – 15
	D – 7
	F – 2
	F – 4
90269–07077	C – 15
	D – 3
	D – 5
90338–05271	B – 14
90338–06018	D – 15
90338–07043	D – 15
90338–08174	B – 12
	B – 13
90338–08220	D – 3
90338–16262	C – 5
90340–14132	B – 11
90340–27129	B – 2
90340–32116	C – 7
90387–060G7	D – 13

NUMERICAL INDEX

PART NO.	GRID NO.
90387–0602X	F – 2
90387–06023	E – 13
90387–06027	D – 12
90387–061W6	D – 12
90387–06372	D – 6
90387–064H8	E – 11
90387–065J6	B – 12
	D – 3
90387–066K1	D – 5
90387–07391	B – 9
90387–1012B	D – 6
90387–10636	E – 12
90387–1214V	C – 15
90387–127V3	C – 14
90387–127W0	D – 6
90387–1312P	C – 15
90387–1414W	C – 15
90387–2200T	E – 2
90387–2202V	C – 12
90387–2504A	C – 11
90387–2513E	C – 11
90387–253M6	C – 11
90387–2813C	C – 11
90387–2813D	C – 11
90401–10160	E – 8
90401–10172	E – 9
	E – 14
90401–20145	B – 11
90413–07007	B – 8
90413–09032	B – 13
90413–10016	B – 12
90413–18033	B – 13
90430–06014	B – 7
	C – 5
90430–08119	B – 2
90430–08143	C – 7
90430–10148	F – 13
90445–08605	D – 5
90445–087K6	B – 9
90445–09500	B – 13
90445–09541	B – 14
90445–102G9	D – 13
90445–11147	B – 13
90445–11262	B – 13
90445–11795	B – 12
90445–123G5	B – 8
90445–307K7	B – 13
90446–08001	F – 14

PART NO.	GRID NO.
90446–15386	E – 13
90450–22052	B – 9
90450–35001	B – 7
	B – 9
90450–38040	B – 7
90450–54093	B – 12
90450–68094	B – 12
90460–59211	F – 2
90461–10132	D – 9
90461–10136	C – 7
90462–10182	C – 7
90464–07259	D – 3
90464–12036	C – 15
90464–12089	D – 13
90464–13073	B – 14
	F – 14
90464–13077	E – 7
	F – 14
90464–15157	E – 7
90464–15195	E – 7
	F – 14
90464–16025	E – 15
90464–18116	F – 15
90464–20213	D – 2
90465–08395	B – 8
90465–10306	B – 11
90465–18147	F – 15
90467–08003	D – 5
90467–08017	B – 14
90467–08075	B – 9
90467–09037	B – 8
	B – 14
90467–10008	D – 13
90467–10041	B – 12
90467–11019	D – 5
90467–11044	B – 8
	D – 14
90467–11090	B – 7
	B – 8
90467–12085	E – 8
90467–14015	C – 6
90467–14057	D – 13
	E – 14
90467–15012	B – 13
90467–15054	B – 13
	C – 6
90467–15197	B – 13
90467–16098	B – 13

PART NO.	GRID NO.
90467–16195	C – 6
90467–17128	B – 13
90467–18196	C – 6
90467–20030	B – 13
90468–20196	D – 8
90480–12072	D – 3
90480–12314	B – 12
90480–12607	E – 13
90480–13163	D – 13
90480–13398	D – 5
	F – 3
	F – 4
90480–15363	B – 9
90480–18276	F – 11
90501–064L1	C – 13
90501–12743	E – 11
90501–225A9	C – 10
90506–13535	C – 14
90506–18224	E – 10
90506–20193	E – 13
90506–26225	E – 10
90508–165B1	C – 10
90508–183B9	E – 10
90508–184B0	E – 11
90508–295B2	C – 14
90560–25270	C – 10
91314–06012	D – 9
91314–06018	C – 8
91314–06020	C – 7
91314–06025	C – 7
	C – 8
91314–06045	E – 11
91314–08025	D – 11
91314–08030	D – 9
	E – 7
91314–08035	D – 11
91317–05010	D – 13
91317–06012	F – 13
91317–06016	F – 13
91317–06020	B – 7
	B – 9
	B – 12
	E – 7
91317–06025	B – 6
	B – 11
91317–06030	B – 10
91317–06035	F – 6
91317–06045	B – 2

PART NO.	GRID NO.
91317–06090	D – 12
91401–16012	E – 13
91701–06018	E – 13
91808–17032	B – 11
92014–08012	C – 7
92017–06014	C – 5
92017–06020	C – 14
92017–08030	E – 13
92017–10040	C – 15
92902–04100	E – 8
92902–04600	E – 8
92907–04600	F – 8
92907–06200	E – 13
92907–06600	D – 12
	D – 13
92907–08600	C – 10
92990–06600	C – 4
93101–12004	C – 14
93101–12173	B – 7
93102–15212	C – 10
93102–35423	C – 12
93106–28043	E – 2
93106–35042	E – 4
93106–40041	E – 4
93109–17071	D – 6
	D – 8
93109–33049	D – 6
93210–06667	B – 10
93210–09165	B – 10
	C – 6
93210–12790	C – 5
93210–14579	B – 10
	C – 5
93210–15566	B – 11
93210–15620	E – 8
93210–16325	C – 6
93210–27194	C – 7
93210–32172	C – 7
93210–33133	B – 7
93210–47675	B – 7
93306–00106	B – 7
93306–00304	C – 10
93306–00420	E – 2
93306–07806	E – 4
93306–20464	C – 11
	C – 12
93306–27802	E – 4
93306–30525	C – 11

PART NO.	GRID NO.
93306–30546	C – 11
93310–340N8	C – 10
93315–11206	C – 14
93315–31502	C – 10
93315–31759	D – 6
	D – 8
93315–42523	D – 6
93315–42536	D – 6
93317–11020	C – 10
93317–43580	E – 4
93399–99932	D – 9
93440–10153	B – 2
93440–25084	C – 11
93440–28062	C – 11
93450–17129	B – 3
93501–04011	E – 11
93607–44190	B – 6
93608–17263	C – 7
93900–00030	E – 2
	E – 4
94112–1715S	E – 2
94112–1715T	E – 2
94118–1714K	E – 4
94118–1715U	E – 4
94580–25080	B – 10
94581–55116	E – 4
94591–49120	B – 6
94681–55031	E – 4
94701–00386	B – 2
95024–06016	E – 15
95024–06020	B – 7
95024–06030	D – 3
95027–06008	F – 14
95027–06012	D – 13
	E – 8
	F – 13
95027–06014	F – 13
95027–06016	F – 11
95027–06020	E – 9
	E – 14
	F – 12
95027–06030	C – 15
95027–06040	F – 7
95027–08012	B – 2
95027–08035	C – 15
95027–12060	C – 15
95304–06700	C – 14
95307–08600	E – 5

PART NO.	GRID NO.
95307–08700	E – 13
95604–06200	E – 11
95604–08100	E – 13
95606–06100	E – 8
95607–04100	D – 4
95607–06100	F – 12
95607–06200	F – 11
95607–10200	D – 6
	E – 4
	E – 10
	E – 12
95617–08625	B – 2
95617–10100	D – 6
95707–05500	D – 4
	E – 15
95707–06500	D – 3
	D – 15
	F – 8
95807–06010	F – 15
95807–06012	D – 9
95807–06025	B – 9
95811–06010	B – 9
95814–08025	C – 4
95817–06045	C – 5
95817–06055	C – 5
95817–06065	C – 5
95817–08035	C – 4
95817–08065	C – 5
95824–06020	C – 14
95824–08025	E – 15
95827–06012	B – 9
95827–06025	F – 15
97007–06030	D – 12
97080–06008	C – 4
97702–40610	F – 8
97704–40012	F – 4
97707–40020	F – 9
97707–50016	F – 5
97707–50120	B – 12
97707–60025	F – 13
98502–04012	E – 8
98502–04014	C – 2
98507–04008	F – 8
98507–04010	F – 12
98507–05010	D – 13
	E – 7
98507–05014	F – 2
98507–05025	B – 12

PART NO.	GRID NO.	PART NO.	GRID NO.	PART NO.	GRID NO.	PART NO.	GRID NO.	PART NO.	GRID NO.	PART NO.	GRID NO.
98507–05025	F – 12										
98507–05030	F – 12										
98507–05050	F – 12										
98507–06008	C – 7										
98507–06012	D – 2										
	D – 13										
98707–03016	F – 12										
98907–06012	C – 6										
99001–07600	C – 10										
99001–09600	C – 10										
99009–12400	B – 7										
99009–17400	C – 14										
99009–52500	E – 4										
99231–00080	D – 5										
	E – 15										
99234–00080	D – 5										
	E – 15										
99236–00080	D – 5										
	E – 15										
99530–08012	B – 10										
	C – 7										
	C – 8										
99530–10014	C – 5										
99530–10114	B – 2										

CONTENTS

ENGINE

CYLINDER B2
CRANKSHAFT. PISTON B3
VALVE B4
CAMSHAFT. CHAIN B6
WATER PUMP B7
RADIATOR. HOSE B9
OIL PUMP B10
OIL CLEANER B11
INTAKE B12
CARBURETOR B15
EXHAUST C4
CRANKCASE C5
CRANKCASE COVER 1 . . . . . C7
STARTER C9
CLUTCH C10
TRANSMISSION C11
SHIFT CAM. FORK C13
SHIFT SHAFT C14

CHASSIS

FRAME C15
FENDER D3
SIDE COVER D5
REAR ARM D6
REAR SUSPENSION D8
STEERING D9
FRONT FORK D10
FUEL TANK D12
SEAT D15
FRONT WHEEL E2
FRONT BRAKE CALIPER E3
REAR WHEEL E4
REAR BRAKE CALIPER E6
STEERING HANDLE. CABLE E7
FRONT MASTER CYLINDER E8
STAND. FOOTREST E10
REAR MASTER CYLINDER E13
COWLING 1 . . . . . E15
COWLING 2 . . . . . F3
GENERATOR F6
STARTING MOTOR F7
FLASHER LIGHT F8
METER F9
HEADLIGHT F10
TAILLIGHT F11
HANDLE SWITCH. LEVER F12
ELECTRICAL 1 . . . . . F13
ELECTRICAL 2 . . . . . F14

INDEX

NUMERICAL INDEX M1